Alabama Power

600 North 18th Street
Birmingham, Alabama 35023
205-517-0885 cell
ukelley@southernco.com

December 17, 2020

VIA ELECTRONIC FILING

FERC Project No. 349
Martin Dam Project
Non-Project Use Application: The Landing at Still Waters

Ms. Kimberly D. Bose
Secretary
Federal Energy Regulatory Commission
888 First Street N.
Washington, DC 20426

Dear Secretary Bose,

Alabama Power Company ("APC") operates its Martin Dam Project ("Project") under license No. 349 administered by the Federal Energy Regulatory Commission ("FERC"). Lake Martin Land Company, LLC (Applicant) is proposing the addition of new common area structures (a boardwalk and five docks) at The Landing at Stillwaters to be associated with a residential development in the Stillwaters neighborhood at Lake Martin.

Location:

Maps and photographs depicting the location of the proposed activities may be found in **Attachment A.**

This site is a part of Section 12, Township 20 North, Range 23 East, in Tallapoosa County, AL. The approximate coordinates where the proposed construction will be located are 32.69746, -85.95195**.**

Project Boundary:

The Project boundary at this location is 491 ft msl. All lands associated with the area of development are owned by Applicant down to the 491 ft msl. The deed may be found in **Attachment B.**

Existing Structures within the Project Boundary:

Permit for existing structures may be found in **Attachment C.**

Due to erosion control at the development location, Alabama Power permitted approximately 601(+/-) linear feet of wood seawall. The seawall was permitted locally after inspection of the site, consideration of other options, and the need to protect the existing shoreline.

Proposed Additions: Construction drawings and plans for all proposed common area structures (a boardwalk and 5 docks) may be found in **Attachment D**.

- one (1) Boardwalk P-4: (4 ft wide and 606 ft long) 2,424 S.F. which may accommodate up to five (12) mooring vessels for temporary parking and is constructed on top of the seawall with no associated fill in the lake bed.

- five (5) docks which may accommodate up to (20) mooring vessels listed as follows:
  Dock P-1: 210 S.F. (2) mooring vessels
  Dock P-2: 2,775 S.F. (12) mooring vessels
  Dock P-3: 210 S.F. (2) mooring vessels
  Dock P-5: 120 S.F. (2) mooring vessels
  Dock P-6: 150 S.F. (2) mooring vessels

Agency Consultation:

United States Fish and Wildlife Service: Determined that no federally listed species or critical habitat occur in the project area. Response and documentation may be found in **Attachment E**.

Alabama Department of Conservation and Natural Resources – Wildlife and Freshwater Fisheries Division: There are no objections to the proposed construction of five (5) proposed docks and one (1) boardwalk if proper erosion control and re-vegetation procedures are followed. Installation and implementation of best management practices (BMPs), as outlined in the Alabama Handbook for Erosion Control, will aid in minimizing erosion and migration of sediments into the lake. The local Martin Shoreline Office will monitor the implementation of best management practices at the development site and communicate issues to the developers to address as identified and reported to the local office. The requirement of riprap at the toe of the seawall will be permitted at the local level. Documentation in **Attachment F**.

Alabama Historical Commission: Determined that the project activities described would have no effect on cultural resources listed on or eligible for the National Register of Historic Places. Correspondence and documentation are in **Attachment G**.

Alabama Law Enforcement Agency - Marine Police Division: Found the proposed construction to not create any hazard to navigation for recreational boating. Their response and documentation may be found in **Attachment H**.

United States Army Corps of Engineers: No consultation is required. Lake Martin is non-Section 10 water so no Corps permit required for over water structures if no "fill" in the lakebed (posts will be pile driven - no concrete footers proposed) **Attachment I**.

Neighbor Consultation:
The Applicant contacted (23) adjacent or neighboring landowners and received (10) responses and some of the letters that were received had multiple signatures from different neighbors. All ten responses raised concerns about the following: size of the development, set-back requirements, dock length, unsafe boating conditions, parking of boats along seawall, stormwater run-off, and overall boating safety.

The applicant addressed the issues raised from the neighbors by communicating via response letters the requirements of Alabama Power's Non-residential Permitting Guidelines and the agency consultation process. The general site conditions require an applicant have a minimum of 100 feet of shoreline, a minimum of 25 feet for side lot line setbacks, and the dock requirement length of the lesser of 150 feet or ¼ the distance across local water. The applicant communicated that there were no objections from agencies consulted about the development. The applicant addressed the parking of boats along the seawall as being available only during full pool. The applicant further cited that their stormwater permit through ADEM is how the issue of stormwater run-off would be addressed. Finally, overall boating safety was addressed through the ALEA Marine Patrol Division. After review of the plans, Marine Patrol saw no negative impact or potential hazard that the project would cause to overall boating safety. They concluded that the proposed docks did not create any ingress or egress problems for existing docks. All correspondence may be found in **Attachment J**.

Summary

APC supports the residential development of The Landing at Still Waters and has concluded it to be consistent with the appropriate scenic, recreational and environmental values of the Project. There are no conflicts with environmental issues or Project land uses, and there is minimal impact to the Project. APC requests authorization for the common structures associated with this development. Due to the size of this development, APC requests two (2) years for completion.

Should you have any questions or should you need additional information, please do not hesitate to call me at (205) 517-0885 or email me at ukelley@southernco.com, or, if I am unavailable, please contact Sheila Smith at (256) 396-5093 or scsmith@southernco.com.

Sincerely,

Unzell Kelley

Unzell Kelley
Alabama Power Company
Corporate Real Estate

ATTACHMENT A: MAPS AND PHOTOS

Document Accession #: 20201229-5039 Filed Date: 12/29/2020

The Landing at Stillwaters

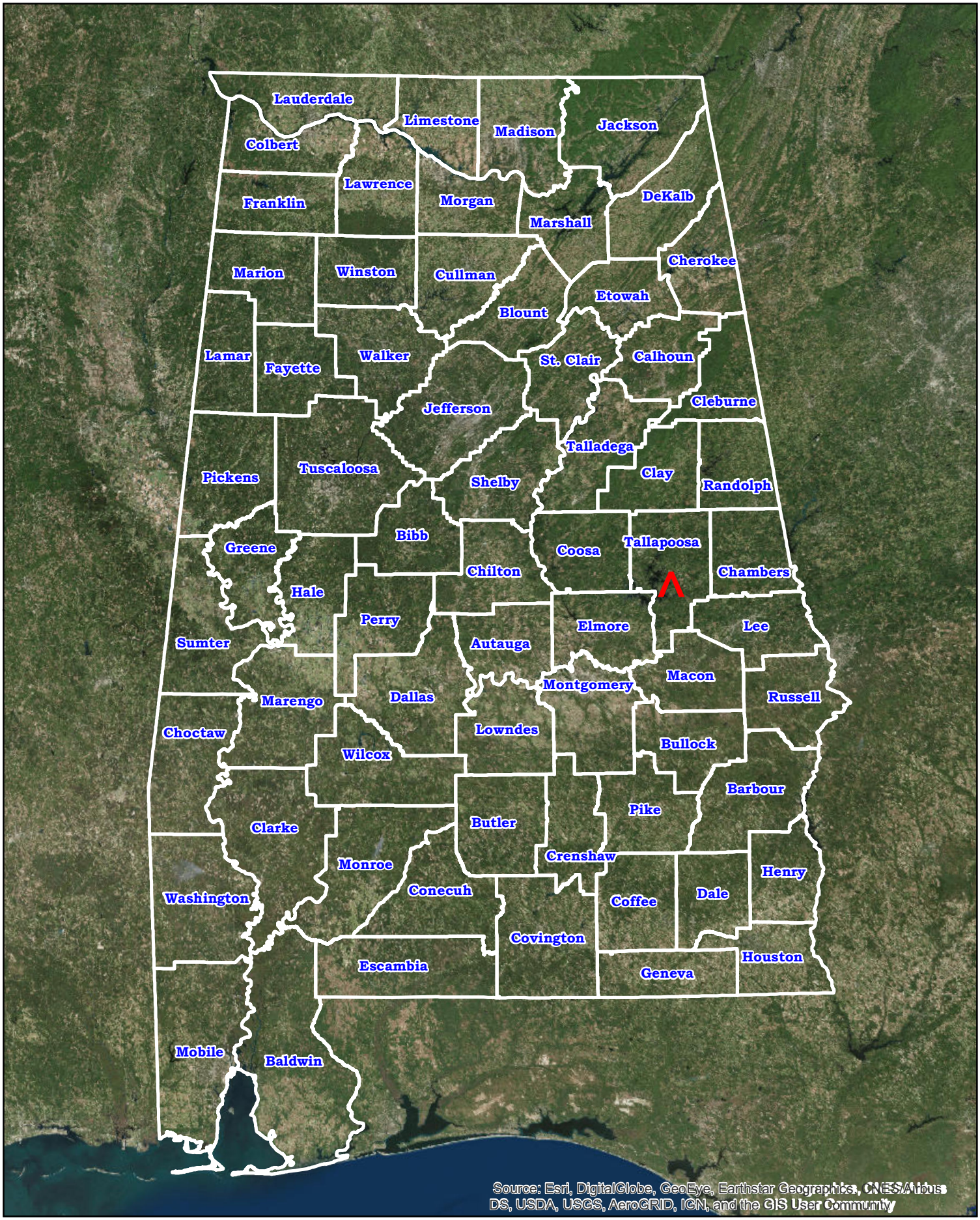

Copyright 2019
All Rights Reserved
Alabama Power Company

40 20 0 40 80 120 Miles

The Landing at Stillwaters on Lake Martin

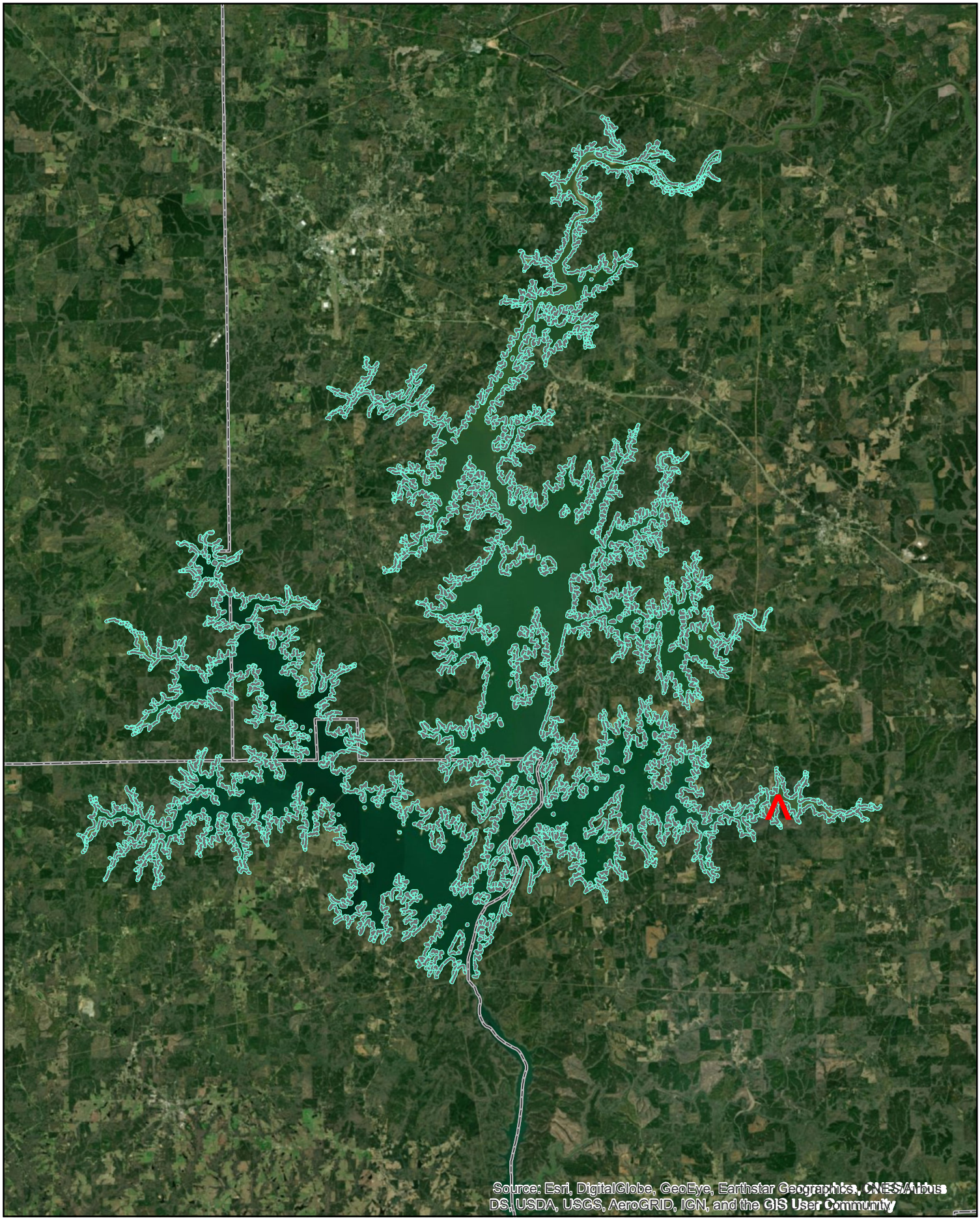

Copyright 2019
All Rights Reserved
Alabama Power Company

3 1.5 0 3 6 9 Miles

THE LANDING AT STILLWATERS FACING NORTH
Write a description for your map.
Legend
Cardinal Heights
S Cardinal Heights
500 ft
N
© 2020 Google

THE LANDING AT STILLWATERS FACING SOUTH
Write a description for your map.
Legend
S Cardinal Heights
N
300 ft
Google Earth
© 2020 Google

The Landing at Stillwaters

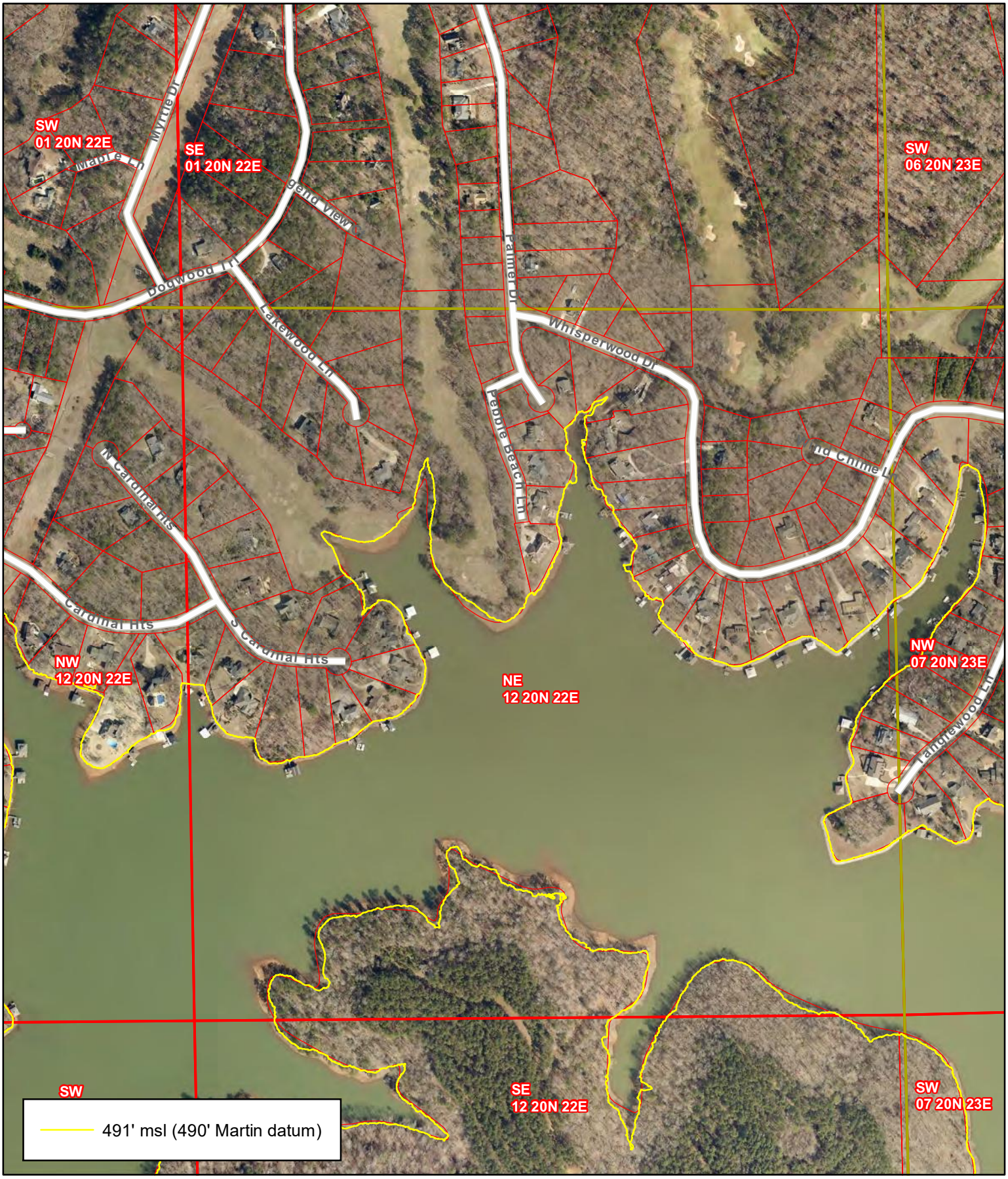

32.73701, -85.80494

0 280 560 1,120 Feet

ATTACHMENT B: DEED

2020 Doc# 345713 1 of 2 T
allapoosa, Alabama Talmadge East, PROBATE JU
DGE 10/9/2020 2:59:28 PM TRAN 39443 REC $17
.00 DEED $17.50

REAL ESTATE SALES VALIDATION INFORMATION

Grantor(s) Address: 797 Moonbrook Drive, Dadeville, AL 36853
Grantee(s) Address: P. O. Box 824, Helena, AL 35080
Property Address: Lot 2, Old Legends, Dadeville, AL 36853
Contract Sales Price: $600,000.00
The Grantors herein, by their signatures to this deed, certify that the above information is true and correct

THE STATE OF ALABAMA } WARRANTY DEED

COUNTY OF TALLAPOOSA }

FOR AND IN CONSIDERATION of Six Hundred Thousand and no/100 Dollars ($600,000.00), to the undersigned, StillWaters Golf, L.L.C. (hereinafter referred to as "Grantor"), in hand paid Lake Martin Land Co, LLC, an Alabama limited liability company, (hereinafter referred to as "Grantee"), the receipt of which is hereby acknowledged, the said Grantor does hereby give, grant, bargain, sell and convey unto the said grantee, all of its right, title and interest in and to the following described property situated in Tallapoosa County, Alabama, to-wit:

Lot 2, of the Re-plat of a portion of Still Waters Resort Golf Course Holes 6-9 as recorded in Plat Book 13 at Page 42 intended to be a correction of Lots 1 and 2 of Old Legends Subdivision as recorded in Plat Book 13 at Page 41 all in the Office of the Judge Probate of Tallapoosa County, Alabama, together with all rights and benefits appurtenant to a non-exclusive easement for ingress and egress via private roads as granted and set forth in the Annexation to Supplemental Declaration of Restrictions and Protective Covenants for Still Waters as recorded on Card No. 108534 in the Office of the Judge of Probate of Tallapoosa County, Alabama.

Subject to the Restrictive and Protective Covenants for Still Waters as recorded at Card No. 041595 in the Office of the Judge of Probate of Tallapoosa County, Alabama.

Prior Deed Reference: Card No. 308082.

2020 Doc# 345713 2 of 2 T
allapoosa, Alabama Talmadge East, PROBATE JU
DGE 10/9/2020 2:59:28 PM TRAN 39443 REC $17
.00 DEED $17.50

To have and to hold the aforesaid premises to said grantee, successors and assigns, to its use and behoof, forever. The Grantor hereby covenants with the said grantee, its successors and assigns that it is lawfully seized in fee simple of the aforegranted premises, that the same are free and clear of all liens and encumbrances; that it has a good right to sell and convey the property to the said grantee, its successors and assigns and it hereby warrants and covenants to defend title to the property to the said grantee, its successors and assigns, against the lawful claims and demands of all persons.

Dated this the 8 day of October, 2020.

StillWaters Golf, L.L.C.

By: _____
Keith Hiett
Its: Sole Member

THE STATE OF ALABAMA)
COUNTY OF TALLAPOOSA)

I, the undersigned authority, a Notary Public in and for said County and State, hereby certify that Keith Hiett, whose name as Sole Member of StillWaters Golf, L.L.C., is signed to the foregoing Warranty Deed and who is known to me, acknowledged before me on this day, that, being informed of the contents thereof, he as such Member and with full power and authority executed the same voluntarily as and for the act of said corporation on the day the same bears date.

Given under my hand and seal this the 8 day of October, 2020.

_____
Notary Public
My Commission Expires: 4/20/21

SARAH GARDNER NOTARY PUBLIC ALABAMA STATE AT LARGE

This Instrument was prepared by:
Gregory D. Harrelson. Attorney At Law
Lake Martin Closings
5050 Highway 49 South
Dadeville, AL 36853

ATTACHMENT C: PERMIT FOR EXISTING STRUCTURE

PGP5

Alabama Power

NON-TRANSFERABLE
LAKESHORE USE PERMIT

PERMITTEE Stillwater Golf LLC PERMIT NO. 40-1657

797 Lakeview Ridge Circle — Dadeville, AL — 36853
Address of Permanent Residence — City and State — Zip Code

(256) 990-8002 ( ) — buildbigsky@gmail.com
Telephone # (Home and Cell) — Email

DATE 7/21/20

[CHECK THE APPLICABLE LAKE]

☐ **Weiss Lake**	Coosa	FERC Project No. 2146	☐ **Lake Bouldin**	Coosa	FERC Project No. 2146
☐ **Neely Henry Lake**	Coosa	FERC Project No. 2146	☐ **Smith Lake**	Black Warrior	FERC Project No. 2165
☐ **Logan Martin Lake**	Coosa	FERC Project No. 2146	☐ **Lake Harris**	Tallapoosa	FERC Project No. 2628
☐ **Lay Lake**	Coosa	FERC Project No. 2146	X **Lake Martin**	Tallapoosa	FERC Project No. 349
☐ **Lake Mitchell**	Coosa	FERC Project No. 2146	☐ **Yates Lake**	Tallapoosa	FERC Project No. 2407
☐ **Lake Jordan**	Coosa	FERC Project No. 2146	☐ **Thurlow Lake**	Tallapoosa	FERC Project No. 2407

TO BE COMPLETED BY APC SHORELINE MANAGEMENT REPRESENTATIVE
Structures/Uses Permitted by this Instrument (ENCLOSED LEGACY STRUCTURES MAY NOT BE PERMITTED USING THIS INSTRUMENT):
Mark structure types with quantity to be permitted

Existing	New	Legacy	Structure Type	Existing	New	Legacy	Structure Type
			Access Road				PWC Float/Lift
			Boardwalk				Retaining Wall
			Boathouse		X		Rip Rap at toe
			Boat or PWC Ramp/Rails		X		Seawall wood
			Concrete Pad				Stairs
			Deck				Steps
			Dredge (additional info on pg. 2)				Storage Building
			Float				Pathway
			Gazebo				Water Pump
			Gravel Pad				Wet Slip
			Pavilion/Camper Cover				Other
			Pier				

Subdivision and Lot Number (if applicable): Closed portion of old golf course

Lot Location Description/Lake Address: 797 MOONBROOK DR, DADEVILLE

Project Description and Comments:
To install 610 +/- LF Wood seawall with rip rap at the toe.
Must be placed within 24" to 36" of current high water mark with rip rap at it's toe.
To join existing wood wall and be built to the exact same standards as permit #40-01126

This Permit is subject to the terms and conditions of Alabama Power Company's General Guidelines for Shoreline Permitting & Permit Terms and Conditions for the applicable reservoir (the "Guidelines"), which are incorporated by reference and made a part hereof as if fully set forth herein. A current copy of the Guidelines may be found at https://apcshorelines.com/. By accepting this Permit and/or maintaining a structure or structures on Alabama Power Company property or easement, Permittee acknowledges that he or she has read and understood the Guidelines and agrees to be bound by the Guidelines. By accepting this Permit and/or maintaining a structure or structures on Alabama Power Company property or easement, Permittee hereby releases and agrees to save and hold Alabama Power Company, its officers, agents, and employees, harmless from any and all causes of action, suits at law or equity, or claims or demands, or from any liability of any nature whatsoever for or on account of any damages to persons or property, including the permitted structure, growing out of the ownership, construction, operation or maintenance by the Permittee of the permitted or other structures subject to this Permit. This Permit is a mere license for the specified use of Alabama Power Company property or easement and may be revoked at any time and for any reason in Alabama Power Company's sole discretion.

TALLAPOOSA County — ALABAMA POWER COMPANY

Sec. 12 Twns. 20 Rng. 22 — By [signature]
Shoreline Management Representative

GPS Lat 32.73806 — Date Permit Issued 8-25-2020

4 Lon -85.80596

Tax Parcel #: 13- 20011200010010 01

LAKESHORE USE PERMIT FEE (To be completed by APC Shoreline Management Representative)

Receipt of lakeshore use permit fee in the amount of $ 400 by check # 5246 150 ⅱ payable to "Alabama Power Company" and drawn on COMMERCE ONE 0238 250 ⅱ Bank is acknowledged.

Signed: [signature] Date: 8-14-20
APC Shoreline Management Representative

If no fee was required, please document the reason below:

 Revised 08/10/2017

TO BE COMPLETED BY APC SHORELINE MANAGEMENT REPRESENTATIVE: The following information is required by the US Army Corps of Engineers for dredge and fill work.

Dredging Project Specification:

☒ New Work ☐ Maintenance Work

Cubic Yards of material to be excavated: 90

Type of Material: LAKE BOTTOM (silt, lake bottom, etc.)

Surface Area (square feet) impacted: 1220

Method of Excavation: TRACK HOE

Nature of area to be dredged: ☐ Upland ☐ Wetland ☒ Lake bottom

Specification for Discharge of Dredged or Fill Material: (Show dredge & fill areas on sketch)

Surface area (square feet) impacted by fill: 2440

Cubic yards of fill (Below Full Pool): 135

Source of fill material (check all that apply): ☒ Dredged from lake ☒ Commercially obtained

How will discharge material be contained on-site? ☒ Seawall ☒ Other RIPRAP
(Note: Rip rap placed for bank stabilization or at the toe of seawall does not require containment)

Nature of disposal/fill areas (check all that apply): ☐ Upland ☐ Wetland ☒ Lake bottom ☐ County landfill site ☐ Site previously approved by AHC

Spoil Site Location: Lat 32 73806 Lon -85 80546

SKETCH OF PERMITTED STRUCTURES

Please include: All New Structures, Existing Structures, Legacy Structures (with each structure individually labeled identifying whether it is a New, Existing, or Legacy Structure), sketch of the shoreline location, property lines, Project Boundary, and dimensions. (Not drawn to scale)

ALL NEW LAKEFRONT STRUCTURES MUST MAINTAIN A 15-FOOT SETBACK FROM PROPERTY LINES.

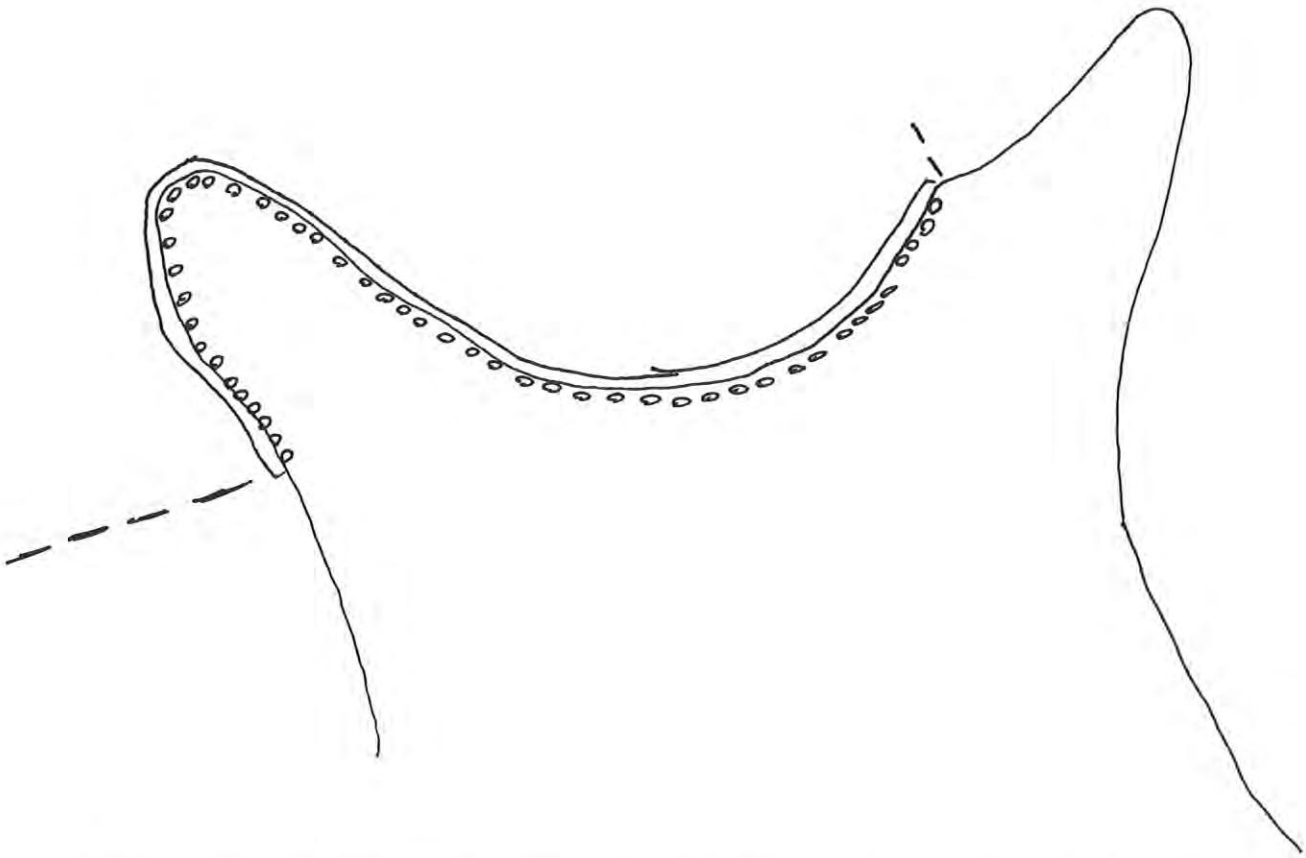

Permittee is authorized to construct new structures and/or maintain structures ONLY as depicted on this sketch. Permittee must submit a signed, updated sketch to the APC Shoreline Manager for approval PRIOR to construction or modification should any construction or maintenance plans differ from those depicted herein.

Alabama Power

GENERAL GUIDELINES FOR RESIDENTIAL SHORELINE PERMITTING & PERMIT TERMS AND CONDITIONS

LAKES: MARTIN, YATES & THURLOW

FERC Project Nos. 349 & 2407

Corporate Real Estate – Shoreline Management
1296 South Tallassee Street
Dadeville, AL 36853

RHETT HANKS, SHORELINE MANAGER
CLINT MCKELVEY, REAL ESTATE SPECIALIST
(256) 825-0053 or (256) 825-1107 (Office)
(256) 825-1189 (Fax)

To apply for a permit please call:

(256) 825-0053

FOR LAKE INFORMATION, PLEASE CALL (256) 825-0053
or visit Alabama Power's website https://apcshorelines.com/

LAKE	FULL POOL (SUMMER) LEVELS	APC FEE OWNERSHIP	FLOWAGE EASEMENT
MARTIN	491' MSL (490' MARTIN DATUM)	491' MSL (490' MARTIN DATUM)	*
YATES	345' MSL (344' MARTIN DATUM)	351' MSL (350' MARTIN DATUM)	363' MSL (362' MARTIN DATUM)
THURLOW	289' MSL (288' MARTIN DATUM)	299' MSL (298' MARTIN DATUM)	N/A

* Lake Martin Control Strip is 30 horizontal feet from 491' MSL (490' Martin Datum) where applicable

PURPOSE

The purpose of these guidelines is to help you understand Alabama Power Company's policies and parameters for residential permitting activities on and around lakes managed by Alabama Power Company. Alabama Power Company owns the pool property of these lakes and in some areas has additional property rights along the shoreline ("Project Lands and/or waters") and has constructed and is maintaining and operating dams on these lakes for the purpose of generating electrical energy under licenses issued by the Federal Energy Regulatory Commission ("FERC"). The FERC licenses authorize Alabama Power Company to institute a system of permits for certain activities and uses of the Project Lands and/or waters. **These guidelines are not intended to be all-inclusive** and do not attempt to address every specific situation that may exist on the lakes. They are provided as general guidelines to assist you in your decision to build or maintain structures on or within the Project Lands and/or waters. These guidelines are implemented by Alabama Power Company to facilitate orderly and reasonable shoreline management of these lakes, recognizing that peculiarities in shorelines and property lines exist and may require flexibility on the part of Alabama Power Company and/or landowners. Sizes and dimensions stated below are considered to be a maximum allowed and may not be allowable in every situation.

Alabama Power Company issues permits for activities on and around the lakes pursuant to its FERC licenses. If you have questions regarding your electric service from the power lines to the meter connection, you should contact the utility providing your electric service. For questions regarding your use or operation of, or problems with, your metered electric service/system, you should contact a licensed electrician.

ALABAMA POWER COMPANY RESERVES THE RIGHT TO MAKE EXCEPTIONS AND MODIFICATIONS TO THESE GUIDELINES AT ITS SOLE DISCRETION.

OVERVIEW OF GUIDELINES

These guidelines provide permitting criteria and procedures for the following categories of activity on Project Lands and/or waters:

Residential Shoreline Construction Activity
- includes the construction and maintenance of non-habitable structures, as well as other ground-disturbing activity, on or near the shoreline of the lake, such as and similar to: piers, landings, boat docks, boathouses, boat ramps, gazebos, bank stabilization, dredging, landscape plantings, and re-grading; and

Legacy Structures
- includes maintenance of existing structures that generally have not been previously permitted by Alabama Power Company and are not compliant with the "Criteria for Non-Transferable Lakeshore Use Permits" set forth below, due to the nature, size, or dimensions of the structures and their location on or within Project Lands and/or waters.

Alabama Power Company issues two types of residential shoreline permits:

1. **Non-Transferable Lakeshore Use Permit**. Used for Residential Shoreline Construction Activity and unenclosed Legacy Structures.
2. **Conditional Legacy Lakeshore Use Permit – Enclosed**. Used for enclosed Legacy Structures.

CONTENTS OF GUIDELINES

The guidelines are broken down into the following sections:

		Page No.
SECTION ONE	Initial Steps for All Permits	2
SECTION TWO	Criteria for Non-Transferable Lakeshore Use Permits (Residential Shoreline Construction Activity and unenclosed Legacy Structures)	3
SECTION THREE	Terms and Conditions of Non-Transferable Lakeshore Use Permits	4
SECTION FOUR	Criteria for Conditional Legacy Lakeshore Use Permits – Enclosed	6

SECTION ONE
INITIAL STEPS FOR ALL PERMITS

This section applies to all permits – Non-Transferable Lakeshore Use Permits and Conditional Legacy Lakeshore Use Permits – Enclosed.

Contact your local Alabama Power Company Shoreline Management Office prior to beginning any construction on or within Project Lands and/or waters. **A written permit must be obtained from Alabama Power Company before any construction begins. Verbal approval is not sufficient.**

A representative of Alabama Power Company will be available to meet with you at the site to discuss and review your proposed work. In order to receive a permit, you must complete the "Request for Lakeshore Use Permit" (which may be found at https://apcshorelines.com/shoreline-management/) and provide the following to your local Alabama Power Company Shoreline Management office:

(i) a signed copy of these guidelines, and

(ii) a copy of the current deed for the property or a copy of the lease if the property is being leased, along with

(iii) any other necessary supporting documentation as determined and required by Alabama Power Company.

Alabama Power Company will review the Request for Lakeshore Use Permit and determine eligibility, the appropriate permit(s), and whether a retrofit or modification is required.

NO PERMITS WILL BE APPROVED AND NO CONSTRUCTION WILL BE ALLOWED WITHOUT A FULLY EXECUTED "REQUEST FOR LAKESHORE USE PERMIT" AND ALL SUPPORTING DOCUMENTS BEING PROVIDED TO ALABAMA POWER COMPANY.

SECTION TWO

CRITERIA FOR NON-TRANSFERABLE LAKESHORE USE PERMITS

APPLICABLE TO RESIDENTIAL SHORELINE CONSTRUCTION ACTIVITY AND UNENCLOSED LEGACY STRUCTURES

The following criteria pertain to Non-Transferable Lakeshore Use Permits for new and certain existing shoreline structures.

Lots with less than 100 linear feet of shoreline may be restricted or may not be eligible for structures.

SETBACK: Any and all lake front property construction (piers, ramps, boathouses, wet slips, PWC flotation, etc.) should be set a minimum of 15 feet from an extension of your property line into the lake. It is solely your responsibility to ensure the setback is maintained for the life of the structure.

NARROW SLOUGH: In a narrow slough, no structure can extend over 1/3 way across the slough (including vessels moored at the structure).

STRUCTURE SIZE AND CONFIGURATION: The total allowable square footage for structures (*e.g.*, floating dock, boathouse, wet slip) is **1510** square feet. The total allowable length for a stationary pier shall not exceed 50 feet. The total allowable length for all other structures shall not exceed 62 feet. Any walkway to a pier or boathouse that is 6 feet or less in width is not counted in the allowable square footage. Covered (roofed) structures must be open and cannot be walled or enclosed; however, a portion of one exterior side may be walled for the placement/construction of an approved storage area. Storage areas must be placed on the portion of the structure closest to the shoreline, excluding any walkway. Pavilions, gazebos or any other appurtenant structure cannot be enclosed or walled except that screening may be used for the exterior walls of the structure. No garbage or foreign materials (remnants of building material, old appliances, tires, etc.) are to be placed on or within the Project Lands and/or waters. Non-reflective materials must be used. No habitable fixtures (*i.e.*, toilets, sinks, showers, bathtubs, etc.) are allowed.

FLOTATION: Floating dock(s) may be attached to a stationary pier or gangway, but the total length of the floating dock and pier/gangway shall not exceed 62 feet. Flotation shall be encased or closed cell (extruded) expanded polystyrene of good quality and manufactured for marine use, which will not become waterlogged or sink when punctured. All beaded foam material being replaced shall be removed from the lake and properly disposed of within one (1) year of permit issuance. Certain other restrictions may apply according to seasonable water levels.

LEGACY STRUCTURES: Notwithstanding noncompliance with some criteria in this section, unenclosed Legacy Structures may be eligible for a Non-Transferable Lakeshore Use Permit. An "unenclosed" structure is a structure containing no more than three walls, such that water can freely enter and exit the structure. See Section Four below entitled "Criteria for Conditional Legacy Lakeshore Use Permits – Enclosed" for criteria pertaining to enclosed Legacy Structures.

PWC FLOAT OR LIFT: Permittees are allowed either two PWC floats or two PWC lifts (or one of each) in addition to their permitted structure(s), so long as the permitted structure(s) is in compliance with these guidelines and the PWC floats or lifts maintain the requisite setback and length.

BOAT RAMPS: Boat ramps shall not exceed 20 feet in width and may extend into the lake only a reasonable distance from the shoreline, which will be determined by Alabama Power Company depending on location.

BANK STABILIZATION: Rip rap and natural bank stabilization are the preferred methods of erosion control; however, use of seawalls will be evaluated on a case-by-case basis. Approved seawalls should be constructed as close to the existing shoreline as possible for the purpose of preventing erosion of the shoreline bank. The source and kind of backfill must be approved by Alabama Power Company. Backfill may be placed only to the contour of the natural slope of the property. No debris or foreign materials may be used as backfill. No new creosote products may be used. Rip rap must be placed at the toe of all new and reconstructed seawalls two feet above the lakebed and two feet out from the bottom of the seawall.

DREDGING: Dredging material from the lakebed must be approved by Alabama Power Company prior to the removal of **any** material. Applications for dredging will be reviewed on a case-by-case basis and may require additional documentation. The proposed location of the spoil site for placement of dredged materials must be identified and included with the application. Spoil may not be placed in a wetland, stream, lake waters, or other "waters of the U.S." as defined by the U.S. Army Corps of Engineers. In addition, spoil material may not be placed on a known cultural resource site or a site with a potential to contain cultural resources.

RESIDENTIAL WATER WITHDRAWAL: Permittees may withdraw water from the lake for residential use. Permission may be temporarily suspended by Alabama Power Company in the event drought conditions exist. Nothing herein authorizes Permittees to withdraw water for commercial purposes.

COVENANTS/DESIGN SCHEMES: Alabama Power Company cooperates with developers on this lake and encourages compliance with covenants and/or other regulatory/design schemes put in place by the developers in order to encourage best practices for shoreline management within the developments. It is your responsibility to obtain the necessary architectural board approvals, if such approval is a requirement, prior to construction.

Lots purchased in Alabama Power Company subdivisions may be subject to additional restrictions.

ALABAMA POWER COMPANY RESERVES THE RIGHT TO MAKE EXCEPTIONS AND MODIFICATIONS TO THESE CRITERIA AT ITS SOLE DISCRETION.

PERMIT ISSUANCE: Upon approval by Alabama Power Company and payment of the requisite permit fee, you will be issued a complete Permit and a pending permit tag will be placed on your lot. You will have **one year** to complete construction. Once construction is complete, **you must notify Alabama Power Company of the completed construction,** and a representative will confirm

compliance with the terms of the permit and take photographs of the structure, remove the pending permit tag from your lot, and **affix a permit tag to your structure that must remain on the structure for the life of the permit**.

SECTION THREE
TERMS AND CONDITIONS OF NON-TRANSFERABLE LAKESHORE USE PERMITS

{THESE TERMS AND CONDITIONS DO NOT APPLY TO CONDITIONAL LEGACY LAKESHORE USE PERMITS-ENCLOSED, WHICH ARE GOVERNED BY THE RECREATIONAL SITE AGREEMENT}

3.1 Any Non-Transferable Lakeshore Use Permit ("Permit") granted by Alabama Power Company (the "Company") to the recipient(s) of the Permit as specified therein ("Permittee") is solely for the purpose described in the Permit.

3.2 For Existing and New Structures: For structures to be modified or constructed, the Permittee shall have obtained the Company's approval prior to beginning modification or construction, and no addition or design change shall be made to the permitted facility without prior approval by the Company.

3.3 **For Legacy Structures: In the event the Legacy Structure is destroyed, any replacement structure proposed by the Permittee must comply with the Company's current "Criteria for Non-Transferable Lakeshore Use Permits" and Permittee must obtain approval for the replacement structure by the Company prior to beginning construction. Unauthorized alteration of the Legacy Structure with the exception of those retrofits or modifications specified in the Permit will cause the Permit to become null, void, and revoked.**

3.4 The Permittee agrees to complete any facility construction within one (1) year of the Permit issuance date. The Permit shall become null and void if the construction is not completed within that period, unless Permittee obtained an extension from the Company prior to the expiration of the initial one (1) year period.

3.5 The Criteria for Non-Transferable Lakeshore Use Permits set forth above shall apply to all Permits, and Permittee shall be bound thereby, unless and only to the extent that the Permit explicitly states otherwise.

3.6 The Company must retain the full, unconditional, unrestricted, and complete right and privilege to raise or lower, restrict, control, store, retain, withhold, increase, decrease, retard, stop, obstruct, divert, or use the waters of the reservoir in any manner the Company, its successors and assigns, may deem expedient; and the Permittee's erection, operation, maintenance, and use of facilities shall in no way interfere with such uses, regulations, or control of said reservoir or the waters thereof. The Permittee agrees that if subsequent operations by the Company require an alteration in the location of the permitted facility, or if in the opinion of the Company the permitted facility shall cause unreasonable obstruction to navigation or that the public interest so requires, the Permittee shall be required, upon written notice from the Company, to remove, alter, or relocate the permitted facility, without expense to the Company.

3.7 The Permit constitutes a mere license for use of the Company's lands and/or waters, and Permittee agrees, on behalf of himself and his heirs, administrators, successors and assigns, that no attempt will be made to set up any claim of property rights or interest in or to said reservoir or the adjacent lands of the Company by reason of the occupancy or use of the permitted facilities hereunder. The Permit does not convey any property rights, either in real estate or material, and does not authorize any injury to private property or invasion of private rights or any infringement of Federal, State or local laws or regulations, nor does it eliminate the necessity of obtaining Federal, State, or local assent required by law for the construction, operation, or maintenance of the permitted facility. The Permit does not convey a view or easement in light or air, and the Company makes no guarantee of any particular view. Permittee agrees, on behalf of himself and his heirs, administrators, successors and assigns, that no attempt will be made to set up any claim against the Company for view or easement in light or air.

3.8 The Permittee agrees and covenants to protect, defend, release, indemnify and hold harmless the Company, its officers, agents, and employees, from and against any and all causes of action, suits at law or equity, or claims or demands, or from any liability of any nature whatsoever for or on account of any actual or alleged damages to persons or property, including the permitted facility, growing out of the Company's issuance of this Permit to Permittee or the ownership, construction, operation or maintenance by the Permittee of the permitted or other facilities inside the Project boundary.

3.9 The Company shall in no case be liable for any damage or injury to the permitted facility that may be caused by nature or caused by or result from subsequent operations undertaken by the Company, or any Federal, State or local agency of the Government, for the improvement of navigation or for other lawful purposes and no claims or right to compensation shall accrue from any such damage.

3.10 The Permittee shall at all times insure that the permitted facilities are constructed and maintained in such a manner as to be consistent with shoreline aesthetic values, and comply with all applicable State and local health and safety regulations.

3.11 The ownership, construction, operation, maintenance, and use of the permitted facility are subject to all applicable Federal, State, and local laws and regulations. All expenses and responsibilities for the construction and maintenance of the permitted facilities, including the expenses of obtaining all necessary Federal, State, and local permits or approvals, shall be borne solely by the Permittee.

3.12 The Permittee is solely responsible for proper design, engineering, construction, modification and maintenance of the proposed facility. Issuance of the Permit is not a guarantee or assurance that Permittee's facilities and modifications thereto are safe, proper or adequate for the purpose intended. The Permittee shall solely have the obligation of insuring that the permitted facilities are maintained in a good state of repair.

3.13 The Permittee shall operate and maintain the permitted facility in a manner so as to minimize any adverse impact on fish, wildlife, shoreline wetlands, adjacent streams, lake waters, or cultural resources.

3.14 In the event artifacts or archaeological features are encountered or are believed to be encountered during construction, work shall cease and Permittee shall immediately contact the appropriate Company Shoreline Management office.

3.15 No permitted structures shall be used for human habitation.

3.16 The Permittee shall not charge others for use of the permitted facility and no commercial activity may be engaged in thereon.

3.17 The size and design of all facilities shall be kept as shown on the attached "Sketch of Permitted Structures." Any proposed changes must be approved by the Company prior to construction.

3.18 Boat mooring buoys and flotation units of floating facilities shall be constructed of materials that will not become waterlogged or sink when punctured. Un-encapsulated white beaded foam flotation is prohibited and existing un-encapsulated foam must be replaced within one (1) year of Permit issuance.

3.19 No attempt shall be made by the Permittee to forbid the full and free use by the public of all navigable waters or Project Lands adjacent to the permitted facility or to unreasonably interfere with navigation in connection with the ownership, construction, operation or maintenance of the permitted facility.

3.20 The Company will post the display permit tag on the facility or on the land areas covered by the Permit so that it can be visually checked with ease from the water. **This tag must remain in place at all times.**

3.21 Permittee shall cooperate with and participate in the program of solid waste disposal in effect in the area of the permitted facility. Permittee shall keep the lands and waters occupied by and surrounding the permitted facility free of all waste, garbage, and other unsightly debris and materials, and is to comply with local health rules and regulations.

3.22 The Permit is non-transferable. The Permit and Permittee's rights thereunder are personal to Permittee and may not be assigned without the express written consent of the Company, which the Company may grant or withhold in its sole discretion and without regard to any standard of reasonableness or otherwise; provided, however, that the Company agrees that it will not unreasonably withhold its consent to an assignment to an assignee to whom Permittee conveys the adjacent land or leasehold. In the event Permittee conveys or otherwise transfers the adjacent land or leasehold, Permittee shall give to the Company notice in writing of the name and address of the intended transferee at least seven (7) days prior to the transfer. In the event that the Company is not given such notice, then at the option of the Company exercised at any time thereafter, the Permit will terminate upon Permittee's transfer of any portion of the adjacent land or leasehold. Permittee shall provide prior notice to any potential transferee of the existence and terms of the Permit. In the event that the Company shall not give its written consent to the assignment of the Permit to any purported transferee, any attempted transfer shall be void, but such purported transferee shall nonetheless be bound by the provisions of the Permit (including the Company's right to terminate the Permit as a result of such assignment), and the continued use of the permitted facilities by any such purported transferee shall conclusively be deemed the purported transferee's agreement to be bound by all the terms and provisions hereof, including the acknowledgement of the permissive nature of the continuation of the permitted structure and the agreement to indemnify the Company.

3.23 If, in the sole opinion of the Company, the Permittee has failed to comply with any of the conditions hereof, or with any additional conditions imposed by the Company, or any Federal, State, or local agency of the Government, the Permittee shall take appropriate action to correct the violation. If the violation continues for a period of sixty (60) days after notice thereof by the Company, the Company may in its sole discretion, cancel the Permit and the Company may remove or require Permittee to remove, or cause to be removed from the Project Lands and waters within sixty (60) days, any facility constructed or maintained thereunder, at Permittee's expense. In the event the Company removes the facility, the Company may recover, from the Permittee, the expense of removing the facility.

3.24 By thirty (30) days' written notice, mailed to the Permittee by registered or certified letter, the Company may revoke the Permit whenever it determines that the public interest necessitates such revocation or when it determines that the Permittee has failed to comply with the conditions of the Permit. The revocation notice will specify the reasons for this action. Once the Permit has been revoked, the Permittee must remove the facility within sixty (60) days at his expense and restore the Project Lands and/or waters to their former condition. If the Permittee fails to remove and so restore to the satisfaction of the Company, the Company may do so by contract or otherwise and recover the cost thereof from the Permittee.

3.25 Notwithstanding the preceding condition, if in the opinion of the Company emergency circumstances dictate, the Company may summarily revoke the Permit.

3.26 At such time that the Permittee ceases to operate and maintain the permitted facility, ceases to hold an ownership or possessory interest in land adjoining the permitted facility, or upon revocation of the Permit by either the Company or Permittee, the Permittee shall remove the permitted facility within sixty (60) days, at his expense, and restore the Project Lands and/or waters to their former condition. If the Permittee fails to remove and so restore to the satisfaction of the Company, the Company may do so by contract or otherwise and recover the cost thereof from the Permittee.

3.27 In the event the Company removes a permitted facility for any reason herein, the Company may, at its sole discretion, dispose of or destroy any or all of the removed permitted facility.

3.28 Any obligation to reimburse the Company for removal of a permitted facility shall be in default if such reimbursement is not paid in full within thirty (30) days of written demand by the Company to the Permittee for said reimbursement. When in default, the delinquent amount owed (the "Delinquent Amount") shall bear interest at the rate of twelve percent (12%) per annum until the Delinquent Amount is paid in full. The Permittee also shall be responsible for the payment of all costs and expenses, including attorneys' fees and court costs, incurred by the Company in collecting the Delinquent Amount owed by the Permittee to the Company. In consideration of the premises and in order to secure the payment of the Delinquent Amount, plus interest and all costs and expenses, including attorneys' fees and court costs, incurred by the Company in collecting the Delinquent Amount, the Permittee does hereby assign, grant, bargain, sell and convey unto the Company a lien against the Permittee's real property adjacent to the Project Lands (the "Adjacent Property"). Said lien shall secure and does secure payment of the Delinquent Amount, plus interest and all costs and expenses, including attorneys' fees and court costs, incurred by the Company in collecting the Delinquent Amount. Said lien also shall secure and does secure all costs of the enforcement of the said lien. The lien granted herein may be foreclosed in the same manner as real estate mortgages in the State of Alabama, and the Permittee hereby grants to the Company the power of sale so that the Company may foreclose the lien at public auction in front of the courthouse door in the county or counties, as may be required, where the Adjacent Property is located, either in person or by auctioneer, after having given notice of the time, place and terms of sale, together with a description of the property to be sold, by publication once a week for three (3) successive weeks prior to said sale in a newspaper of general circulation published in the county or counties in which the Adjacent Property is located. The Company may bid at said sale and purchase the Adjacent Property. The lien granted herein to the Company shall be effective from and after the time of the recording of copies of these Guidelines, the Permit, and a Statement of Lien signed by the Company in the probate court of the county or counties in which the Adjacent Property is located, stating, without limitation, (i) the name of the Company; (ii) the name of the Permittee; (iii) a description of the Adjacent Property; and (iv) the amount secured by the lien granted herein as of a specific date.

3.29 Neither the Permittee nor subsequent owners of the Permittee's adjacent property will be eligible to receive a new Permit until any amounts owed by the Permittee to the Company for removal of a permitted facility have been satisfied. Permittee

agrees to provide notice to the subsequent owners of the Permittee's adjacent property of any amounts owed by Permittee to the Company for removal of a permitted facility, prior to any sale or transfer of Permittee's adjacent property.

3.30 The Company's rights contained herein, including without limitation the Company's rights to remove the Permittee's facility upon revocation of the Permit, recover the cost thereof from the Permittee, and recover attorneys' fees shall survive the revocation or termination of the Permit.

3.31 If it is determined by the Company or a Federal or State agency that the Permittee is performing work that may affect species listed as threatened or endangered under the Endangered Species Act or the habitat of such species, the Permittee must cease and desist any and all work until further notified by the Company.

3.32 Any Permittee that is issued a Programmatic General Permit (PGP) by the Company will be responsible for complying with the Special and General Conditions contained within the PGPs and with any project specific conditions listed in the Lakeshore Use Permit. A copy of the PGPs for minor activities on Company reservoirs is available from the Company and on the web sites of the Company (https://apcshorelines.com/shoreline-management/) and the U.S. Army Corps of Engineers (http://www.sam.usace.army.mil/Missions/Regulatory/GeneralPermits.aspx).

3.33 The Permittee shall minimize adverse impacts to State waters by strict adherence to the ADEM Special Conditions and Best Management Practices that can be found on the Company's Shoreline Management website at: https://apcshorelines.com/shoreline-management/.

3.34 The Permittee shall comply with any specific terms and conditions as listed in the Approval Letter from the Company's Environmental Affairs Department.

SECTION FOUR

CRITERIA FOR CONDITIONAL LEGACY LAKESHORE USE PERMITS – ENCLOSED

APPLICABLE TO ENCLOSED LEGACY STRUCTURES

The guidance and resolution options discussed in this section are intended for use in permitting and retrofitting (where appropriate) "Legacy Structures" (hereinafter sometimes referred to singularly as a "Legacy Structure").

A Legacy Structure is an existing structure that generally has not been previously permitted by Alabama Power Company and is not compliant with the "Criteria for Non-Transferable Lakeshore Use Permits" set forth above due to the nature, size, or dimensions of the structure and its location on or within the Project Lands and/or waters. The presence of unauthorized structures impedes Alabama Power Company's ability to exercise its property rights and/or flood control. This section outlines the methods by which the owner of a Legacy Structure may be issued a permit. Structures that are unenclosed (*i.e.*, at least one side is not walled) may be eligible for a "Non-Transferable Lakeshore Use Permit." Structures that are enclosed (*i.e.*, all sides are walled) may be eligible for a "Conditional Legacy Lakeshore Use Permit - Enclosed" (hereinafter referred to as "Legacy Permit") upon signing a Recreational Site Agreement.

If a structure owner can show that the entirety of the structure (including all footings, piers, and foundations) is NOT located within Alabama Power Company's property, easement, and/or flood storage area and provide documentation by a licensed surveyor or other evidence acceptable to Alabama Power Company, then no permit is necessary.

RESTRICTIONS ON MODIFICATION, MAINTENANCE, AND REPLACEMENT

Alabama Power Company has initiated the Legacy Structure permit program as a way to transition existing, non-compliant structures into the permitting and compliance program and to ensure Alabama Power Company's flood storage area and property rights are protected. However, this program is limited to the life of the Legacy Structure as it **currently exists**. Should a Legacy Structure be destroyed or need substantial repair and the Legacy Structure owner wishes to replace the structure, then any proposed replacement structure must be permitted by Alabama Power Company prior to construction and meet the "Criteria for Non-Transferable Lakeshore Use Permits" set forth above. The Legacy Structure owner may be required to remove the remains of the destroyed structure or structure that is beyond repair from Alabama Power Company's property, easement, or flood storage area. **Any expansion, substantial rebuilding or replacement of the structure without Alabama Power Company's expressed written consent will be considered a breach of the terms of the permit, and the permit will be revoked.**

PREVIOUS AGREEMENTS

Alabama Power Company will honor all previous written agreements with Legacy Structure owners related to their shoreline structure(s) provided the owner submits a copy of the agreement to Alabama Power Company and the terms of the agreement have not been breached. Holders of previous agreements will be required to apply, at no cost, for a new permit if a valid permit does not already exist. After approval of a new permit by Alabama Power Company, a copy of the existing written agreement will be incorporated into the permit documentation. The permit will remain valid as long as the terms of the original written agreement are not breached.

GUIDELINES FOR MODIFICATION

NO MODIFICATION REQUIRED: The owner of a Legacy Structure may be eligible for a Legacy Permit without the need for any modifications if either:

- The portion, if any, of the structure located beneath the flood storage area elevation can be shown to allow water to freely enter and exit the structure. Alabama Power Company may require the owner to provide Alabama Power Company with certification from an engineer or contractor licensed in good standing affirming the ability for water to freely enter and exit the structure. Alabama Power Company reserves the right to require recertification of this requirement at any time.
  OR
- The entirety of the lowest floor of the structure is located above the flood storage elevation for the lake, and the portion, if any, of the structure located beneath the lowest floor can be shown to allow water to freely enter and exit the structure.

Permanent structures adjacent to recreational vehicles or mobile homes that meet the criteria for a Legacy Structure are also subject to these guidelines, and the term "Legacy Structure" includes such facilities.

MODIFICATION REQUIRED: Owners of Legacy Structures that do not meet the conditions shown above may be required to retrofit or modify their structures in order to accommodate Alabama Power Company's flood storage area by allowing the free flowage of water.

The permit will specify if a modification is required. If modification is required, the structure owner may refer to the methods for retrofitting (*i.e.*, making changes to existing) structures in floodplains outlined in FEMA's *Homeowner's Guide to Retrofitting*, FEMA P-312 (current edition available on FEMA's website: http://www.fema.gov/library). **The structure owner will be responsible for choosing one of the following four methods to accommodate Alabama Power Company's flood storage area (additional mitigation may be required at the discretion of Alabama Power Company personnel):**

1. Relocation;*
2. Demolition;*
3. Elevation; or
4. Wet Flood-proofing.

* If the owner chooses options 1 (Relocation) or 2 (Demolition), no Legacy Permit or Recreational Site Agreement is necessary. The owner must, however, contact the local Alabama Power Company Shoreline Management Office before beginning any relocation or demolition work.

NOTE: Alabama Power Company does not allow levees and floodwalls in its flood storage area, as the functioning of these structures directly interferes with the ability of Alabama Power Company to exercise its flowage rights.

Alabama Power Company does not represent or warrant that any retrofits and/or modifications are safe or suitable for the structure. **Alabama Power Company requires retrofitting and/or modification ONLY to protect its flood storage area and/or property rights and makes no warranty for the safety or suitability of any structure retrofits and modifications.** Alabama Power Company personnel are not authorized to instruct owners on how to become compliant with local flood ordinances or on which method for retrofitting or modifications they should choose in order to become compliant with Alabama Power Company's guidelines.

LEGACY STRUCTURES SHALL NOT BE MODIFIED OR EXPANDED EXCEPT AS CONTEMPLATED HEREIN AND/OR IN THE APPICABLE PERMIT. ANY ATTEMPT TO IMPERMISSIBLY MODIFY OR EXPAND A LEGACY STRUCTURE WILL PRECLUDE ISSUANCE OF A PERMIT AND WILL CAUSE EXISTING LEGACY PERMITS TO BECOME NULL, VOID, AND REVOKED.

PROCESS FOR OBTAINING A LEGACY PERMIT

LEGACY STRUCTURE RECREATIONAL SITE AGREEMENT: In addition to completing the "Initial Steps for All Permits," a structure owner seeking a Legacy Permit must sign a Legacy Structure Recreational Site Agreement that will be filed with the local probate court.

CERTIFICATION: For structures requiring modification, the owner may be required to provide Alabama Power Company with certification from an engineer or contractor, licensed in good standing, affirming that water may freely enter and exit the modified structure. Alabama Power Company reserves the right to require recertification of this requirement at any time.

PERMIT ISSUANCE: For structures requiring no modification, Alabama Power Company will verify any required certification, photograph the structure and issue to the owner the appropriate permit(s). For structures requiring modification, Alabama Power Company will verify that the modification has been completed, verify any required certification, photograph the modified structure, and issue to the owner the appropriate permit(s).

THERE IS NO PERMIT FEE FOR A LEGACY PERMIT

ATTORNEYS' FEES

By accepting a permit from Alabama Power Company and/or maintaining a structure on Alabama Power Company property or easement, Permittee agrees and acknowledges that Alabama Power Company has a right to request, and Permittee has an obligation to pay, any and all attorneys' fees, expenses, and/or costs incurred by Alabama Power Company relating to the enforcement of the rules, regulations, provisions, terms and/or conditions of these General Guidelines for Residential Shoreline Permitting & Permit Terms and Conditions ("Guidelines"), including, without limitation, any and all attorneys' fees, expenses, and costs incurred by Alabama Power Company relating to remedying any action, construction or activity that is not in compliance with these Guidelines, whether caused by Permittee, Permittee's family members, guests, agents, employees and/or contractors.

Permittee Statement: I have received, read, understand and agree to abide by these Guidelines.

Signed: X _____ **Date:** 8/2/20
Permittee

**** By and through the act(s) of accepting a Permit and/or maintaining a structure or structures on Alabama Power Company property or easement rather than removing said structure(s), Permittee is deemed to have read, understood, accepted, and agreed to be bound by the Guidelines, regardless of whether the Guidelines are signed by Permittee.**

ATTACHMENT D: DRAWINGS AND PLANS

Document Accession #: 20201229-5039 Filed Date: 12/29/2020

NON-RESIDENTIAL FERC PERMIT CONSTRUCTION PLAN FOR LAKE MARTIN LAND COMPANY

EXISTING SEAWALL WITHIN FERC PERMIT BOUNDARY

201' OF WOOD SEAWALL

PROPOSED SEAWALL WITHIN FERC PERMIT BOUNDARY

428' OF WOOD SEAWALL

(PERMITTED UNDER RESIDENTIAL SHORELINE PERMITTING)

EXISTING SHORELINE

TOTAL SHORELINE - 629 L.F.

PER APCO GUIDELINES: 1000 S.F. DOCK PER 100 LF OF SHORELINE
MAX. SQUARE FOOTAGE OF COVERAGE ALLOWED IS: 6,290 S.F.

PROPOSED STRUCTURES WITHIN FERC PERMIT BOUNDARY

PROPOSED DOCKS

DOCK P-1 - 210 S.F.
DOCK P-2 - 2,775 S.F.
DOCK P-3 - 210 S.F.
BOARDWALK P-4 - 2424 S.F.
DOCK P-5 - 120 S.F.
DOCK P-6 - 150 S.F.

TOTAL DOCK SQUARE FOOTAGE - 5,889 S.F.

TOTAL VESSEL PARKING AREAS PROPOSED DOCKS:

MAXIMUM 32 VESSELS

PROPOSED DOCKS TO SERVE ADJACENT 33 LOT DEVELOPMENT.

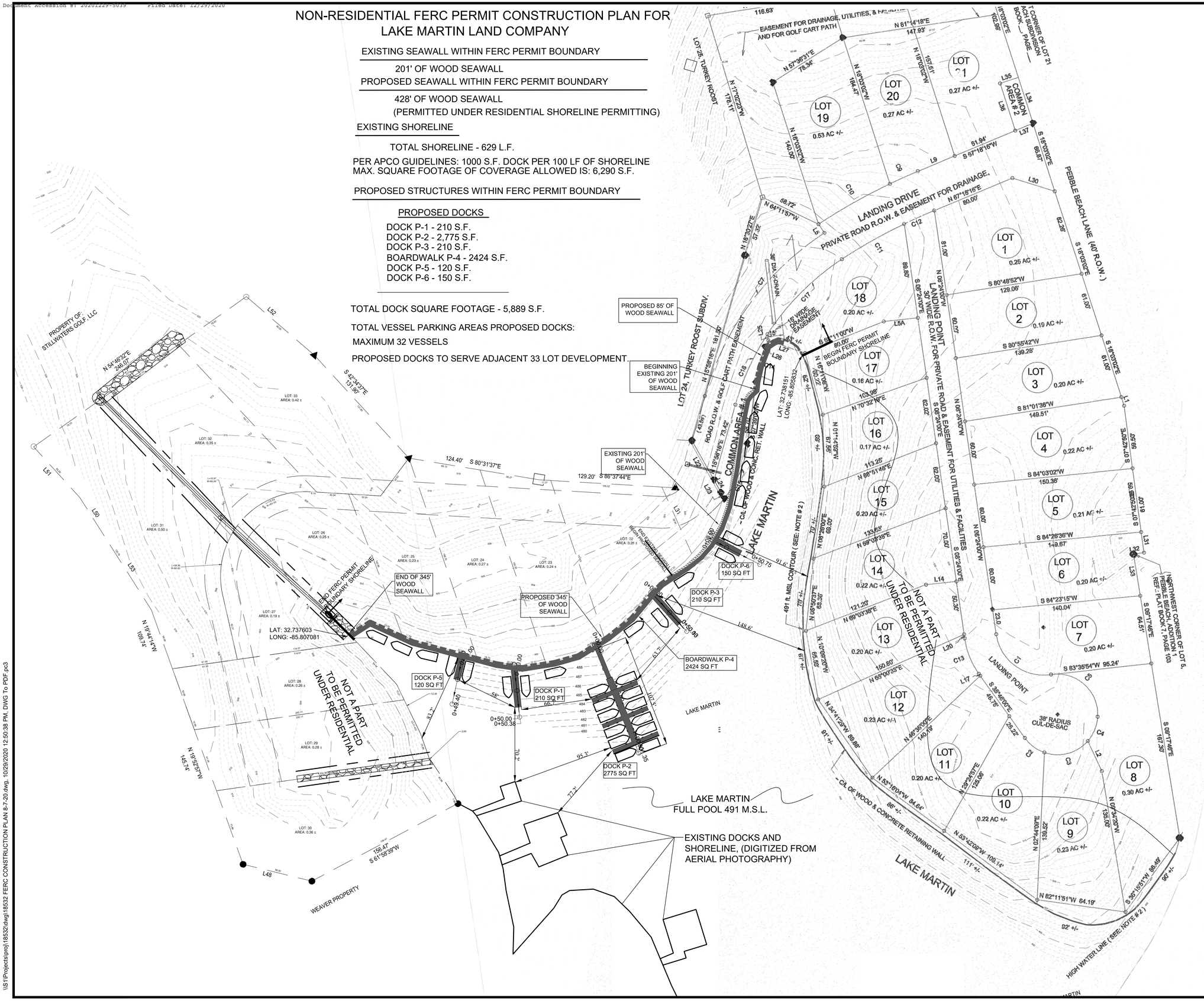

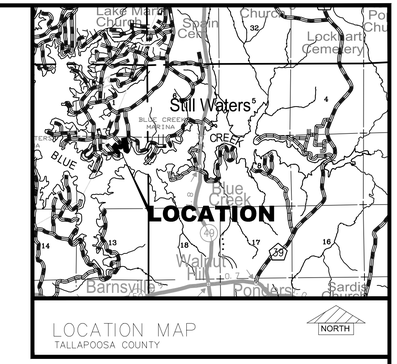

STATE PLANE GRID NORTH

N W E S

GRAPHIC SCALE

(IN FEET)
1 inch = 40 ft.

LEGEND:

- PROPOSED DOCK OR BOARDWALK
- EXISTING SEAWALL
- PROPOSED SEAWALL
- VESSEL PARKING SPACE

GENERAL NOTES:

1.) ALL IMPROVEMENTS ARE NOT SHOWN, ONLY PARTIAL EXISTING IMPROVEMENTS AND ALL PROPOSED IMPROVEMENTS SHOWN

2.) EXISTING SURVEY INFORMATION PROVIDED BY MITCHELL L. DOWNING AL P.L.S. REG# 20036. SURVEY COMPLETED IN 2019

3.) SURVEY INFORMATION OF LAKE BOTTOM IN THE VICINITY OF THE DOCKS PERFORMED BY LARRY E. SPEAKS & ASSOCIATES, INC., JULY 2020.

SCOPE OF PROJECT:

1.) INSTALL NEW BOARDWALK & NON-RESIDENTIAL DOCKS

FERC PERMIT DATA:

1.) 0.14 ACRES, (5,889 SQ FT WITHIN PROJECT BOUNDARY CONTOUR

2.) 9.21 ACRES OUTSIDE THE PROJECT BOUNDARY CONTOUR

3.) 0.14 ACRES WITHIN THE PROPOSED CONSTRUCTION SITE WITHIN THE PROJECT BOUNDARY CONTOUR.

4.) 0 ACRES WITHIN THE PROPOSED CONSTRUCTION SITE OUTSIDE THE PROJECT BOUNDARY CONTOUR.

DRAWING DATE: 10-29-2020

LARRY E. SPEAKS & ASSOCIATES, INC.
CONSULTING ENGINEERS & LAND SURVEYORS
535 HERRON STREET
MONTGOMERY, AL. 36104
TEL.-334/262-1091

ACAD:18532

\\S1\Projects\proj\18532\dwg\18532 FERC CONSTRUCTION PLAN 8-7-20.dwg, 10/29/2020 12:50:38 PM, DWG To PDF.pc3

BOARDWALK "P-4" (LENGTH=606.0')

(2424 S.F.)

12 VESSELS

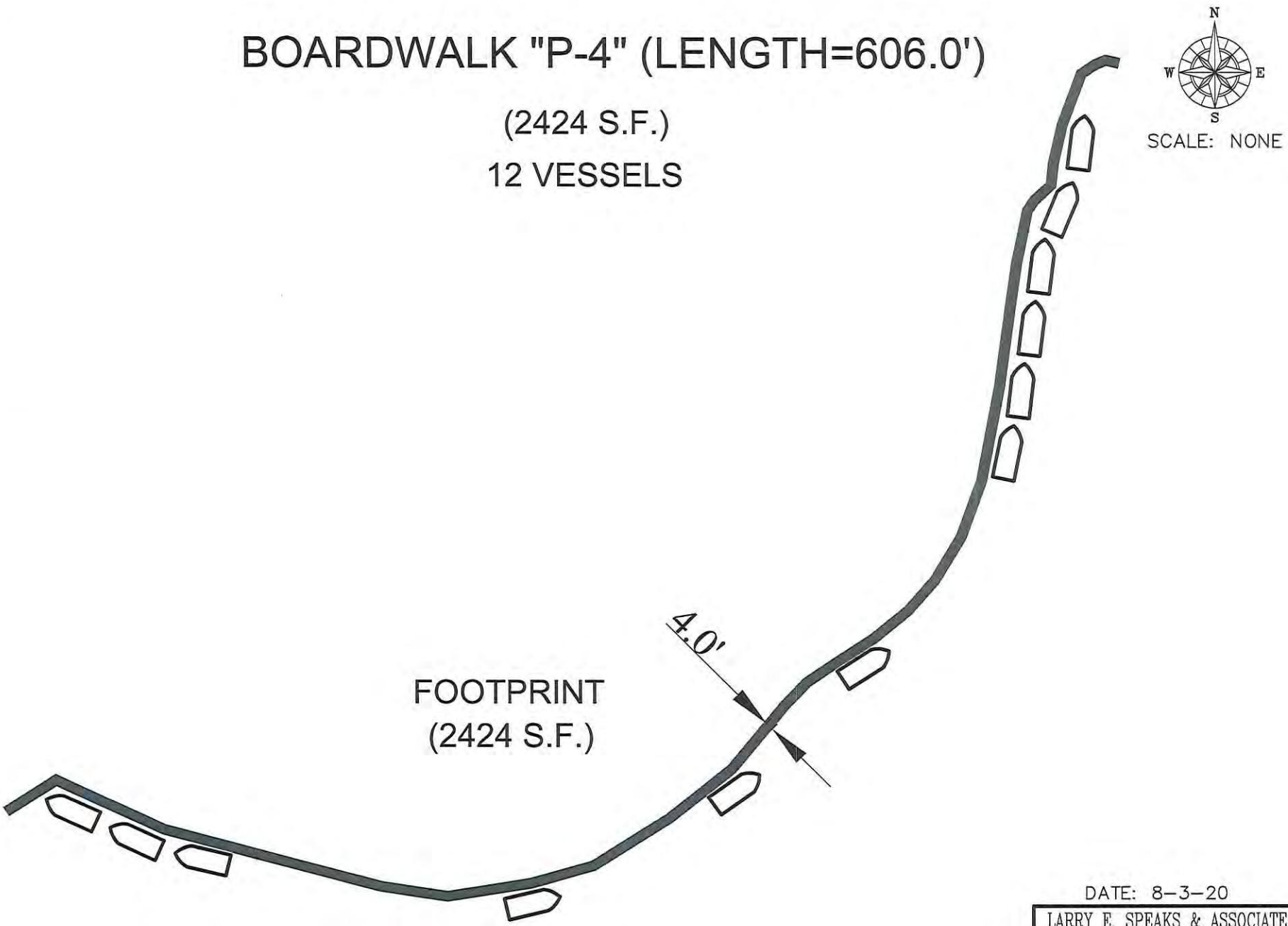

DATE: 8-3-20

LARRY E. SPEAKS & ASSOCIATES, INC.
CONSULTING ENGINEERS & LAND SURVEYORS
535 HERRON ST. MONTGOMERY, AL 36104
(334) 262-1091

DOCK "P-1" (LENGTH=35.0')

SCALE: 1" = 20'

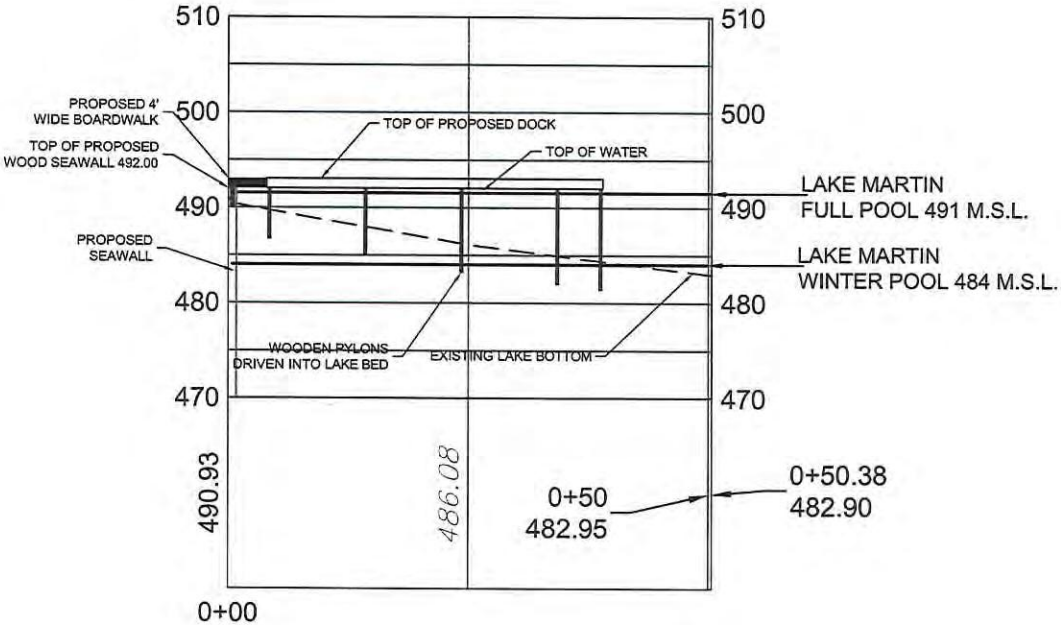

DATE: 8-3-20

LARRY E. SPEAKS & ASSOCIATES, INC.
CONSULTING ENGINEERS & LAND SURVEYORS
535 HERRON ST. MONTGOMERY, AL 36104
(334) 262-1091

DOCK "P-1" (LENGTH=35.0')

(210 S.F.)

2 VESSELS

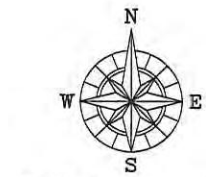

SCALE: 1" = 20'

▮ MOORING CLEAT

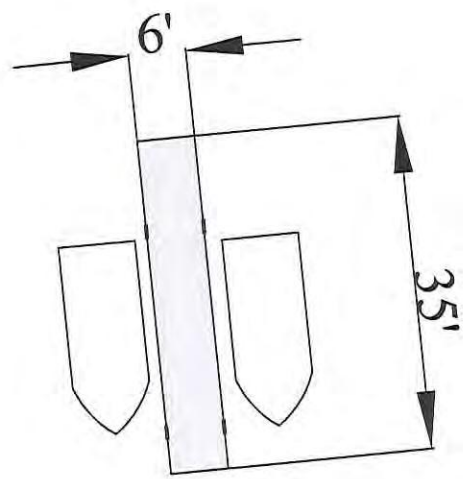

FOOTPRINT
(210 S.F.)

DATE: 8-3-20

LARRY E. SPEAKS & ASSOCIATES, INC.
CONSULTING ENGINEERS & LAND SURVEYORS
535 HERRON ST. MONTGOMERY, AL 36104
(334) 262-1091

DOCK "P-2" (LENGTH=98.0')

(2775 S.F.)

12 VESSELS

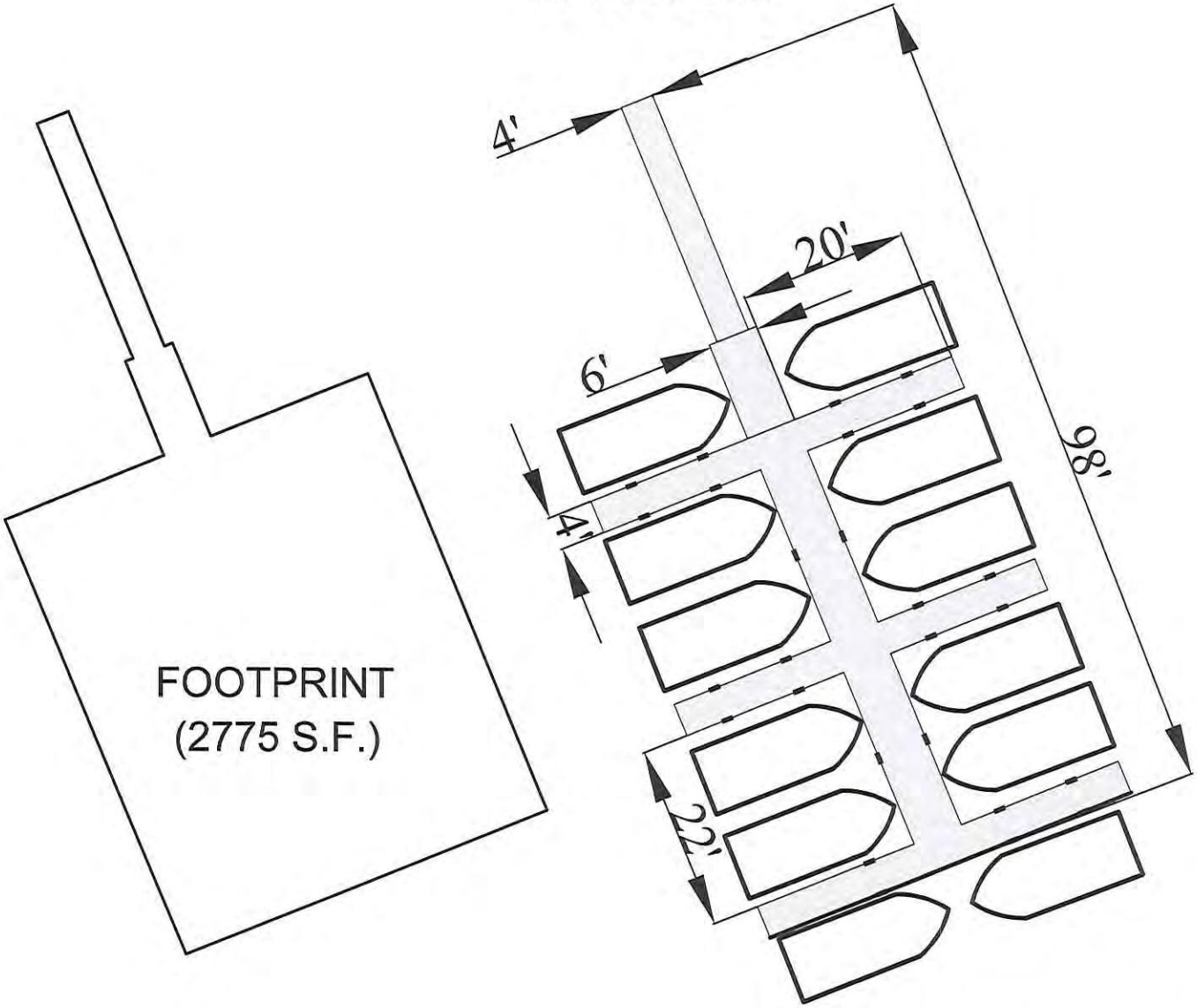

SCALE: 1" = 20'

▮ MOORING CLEAT

DATE: 8-30-20

LARRY E. SPEAKS & ASSOCIATES, INC.
CONSULTING ENGINEERS & LAND SURVEYORS
535 HERRON ST. MONTGOMERY, AL 36104
(334) 262-1091

DOCK "P-2" (LENGTH=98.0')

SCALE: 1" = 20'

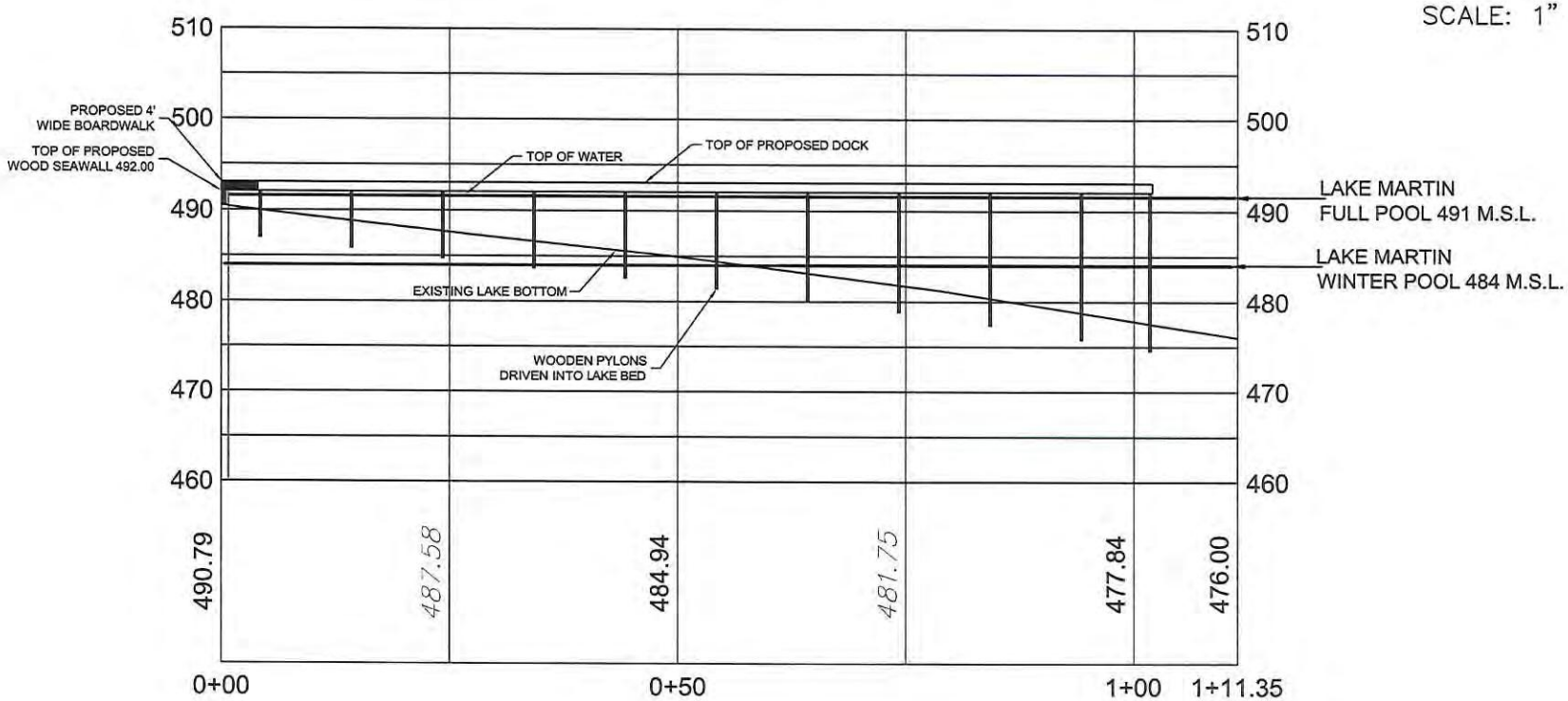

DATE: 8-3-20

LARRY E. SPEAKS & ASSOCIATES, INC.
CONSULTING ENGINEERS & LAND SURVEYORS
535 HERRON ST. MONTGOMERY, AL 36104
(334) 262-1091

DOCK "P-3" (LENGTH=35.0')

(210 S.F.)

2 VESSELS

SCALE: 1" = 20'

▮ MOORING CLEAT

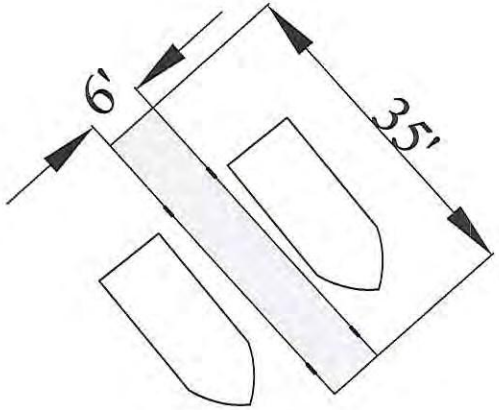

FOOTPRINT
(210 S.F.)

DATE: 8-3-20

LARRY E. SPEAKS & ASSOCIATES, INC.
CONSULTING ENGINEERS & LAND SURVEYORS
535 HERRON ST. MONTGOMERY, AL 36104
(334) 262-1091

DOCK "P-3" (LENGTH=35.0')

SCALE: 1" = 20'

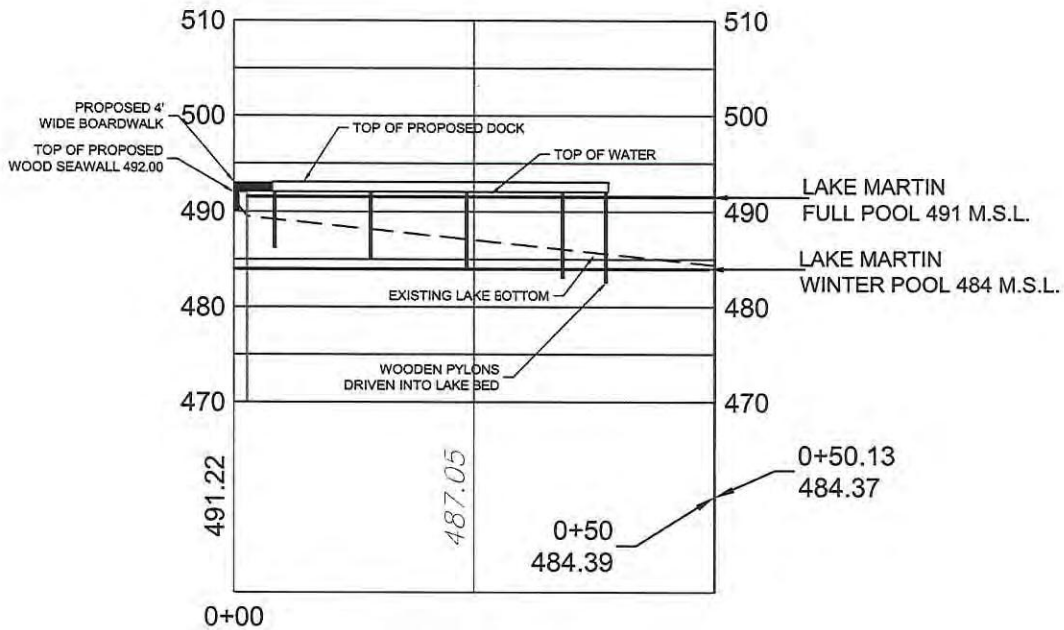

DATE: 8-3-20

LARRY E. SPEAKS & ASSOCIATES, INC.
CONSULTING ENGINEERS & LAND SURVEYORS
535 HERRON ST. MONTGOMERY, AL 36104
(334) 262-1091

DOCK "P-5" (LENGTH=20.0')

(120 S.F.)

2 VESSELS

SCALE: 1" = 20'

▮ MOORING CLEAT

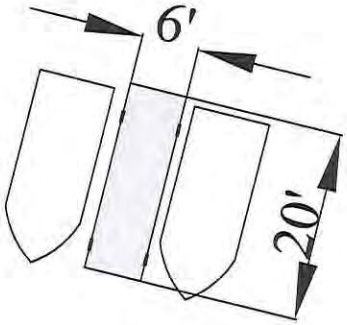

FOOTPRINT
(120 S.F.)

DATE: 8-3-20

LARRY E. SPEAKS & ASSOCIATES, INC.
CONSULTING ENGINEERS & LAND SURVEYORS
535 HERRON ST. MONTGOMERY, AL 36104
(334) 262-1091

DOCK "P-5" (LENGTH=20.0')

SCALE: 1" = 20'

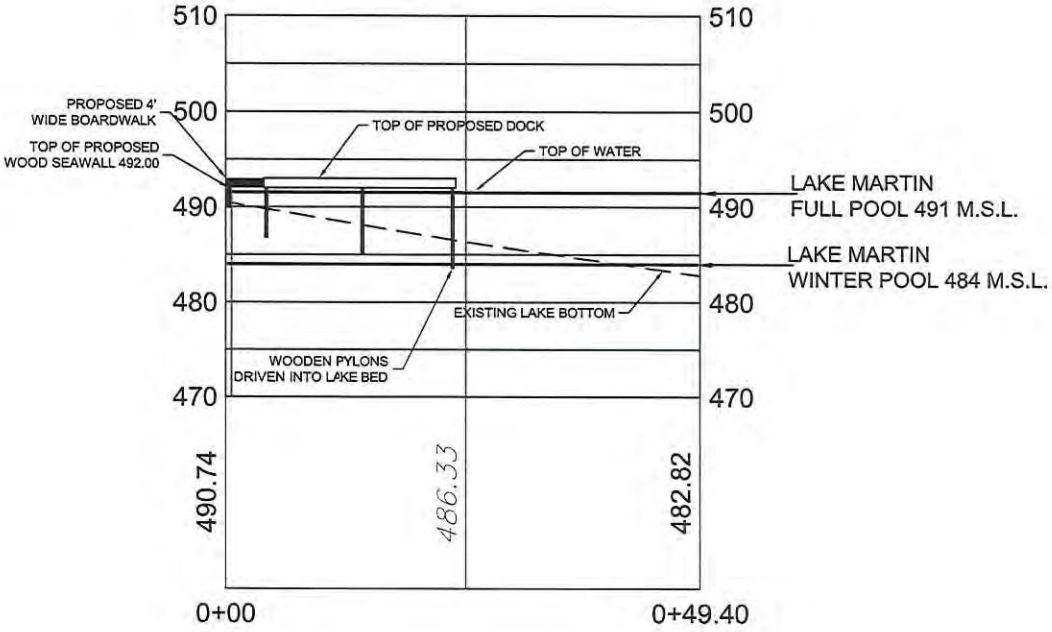

DATE: 8-3-20

LARRY E. SPEAKS & ASSOCIATES, INC.
CONSULTING ENGINEERS & LAND SURVEYORS
535 HERRON ST. MONTGOMERY, AL 36104
(334) 262-1091

DOCK "P-6" (LENGTH=25.0')

(150 S.F.)

2 VESSELS

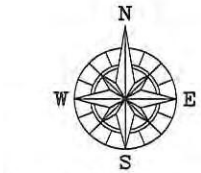

SCALE: 1" = 20'

▮ MOORING CLEAT

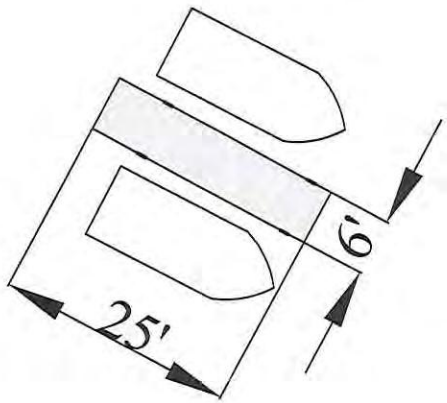

FOOTPRINT
(150 S.F.)

DATE: 8-3-20

LARRY E. SPEAKS & ASSOCIATES, INC.
CONSULTING ENGINEERS & LAND SURVEYORS
535 HERRON ST. MONTGOMERY, AL 36104
(334) 262-1091

DOCK "P-6" (LENGTH=25.0')

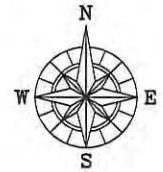

SCALE: 1" = 20'

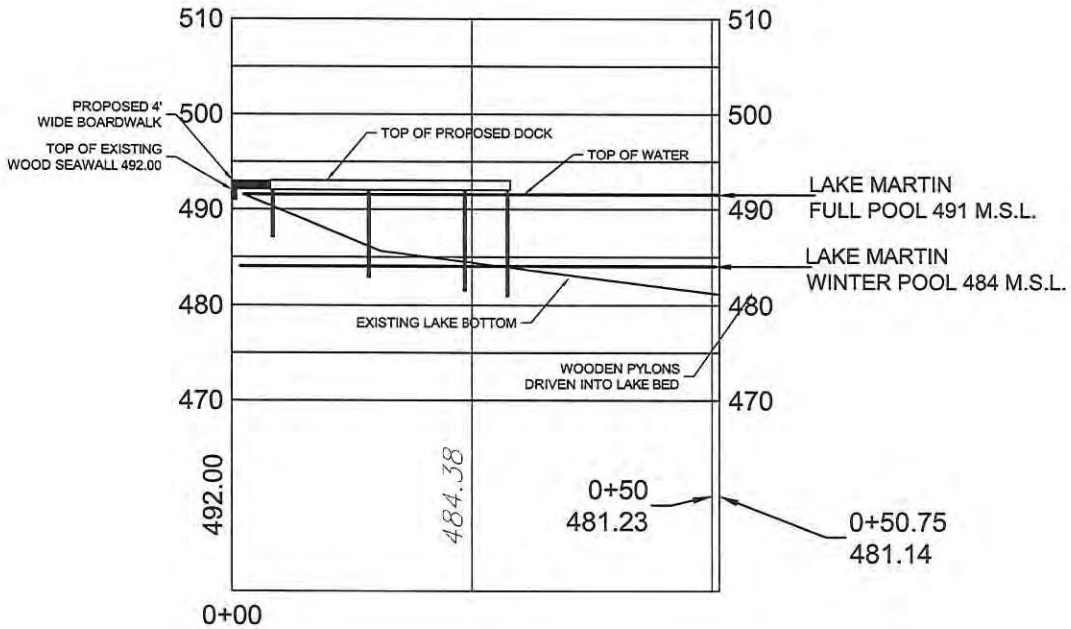

DATE: 8-3-20

LARRY E. SPEAKS & ASSOCIATES, INC.
CONSULTING ENGINEERS & LAND SURVEYORS
535 HERRON ST. MONTGOMERY, AL 36104
(334) 262-1091

ATTACHMENT E: UNITED STATES FISH AND WILDLIFE SERVICE CONSULTATION AND RESPONSE

Document Accession #: 20201229-5039 Filed Date: 12/29/2020

TA/EC

RECEIVED
AUG 14 2020
BY: CA

LARRY E. SPEAKS & ASSOCIATES, INC.
CONSULTING ENGINEERS & LAND SURVEYORS
535 Herron Street
Montgomery, Alabama 36104
Telephone: 334.262.1091
Facsimile: 334.262.2211

AIRPORTS
BRIDGE DESIGN
CONSTRUCTION MANAGEMENT
ENVIRONMENTAL PERMITS
HIGHWAY DESIGN
LAND DEVELOPMENT PLANNING & DESIGN
LAND USE STUDIES
MUNICIPAL WORKS
PARKS & RECREATION FACILITIES

SEWAGE COLLECTION, TREATMENT & DISPOSAL
SOLID WASTE LANDFILLS
STORM DRAINAGE STUDIES & DESIGN
SUBDIVISIONS
SURVEYING: LAND SURVEYS
CONSTRUCTION SURVEYS
TOPOGRAPHIC MAPS
WATER SUPPLY, TREATMENT & DISTRIBUTION

2020-TA-1383

August 7, 2020

US Fish and Wildlife Service
1208-B Main Street
Daphne AL 36526

Attn: Current Field Supervisor

RE: Proposed FERC Permit Construction Plan
Lake Martin Land Company
Lake Martin, Dadeville, Alabama
Tallapoosa County

On behalf of the developer, Lake Martin Land Company, we request your comments regarding the construction of five (5) proposed boat docks and one (1) boardwalk on Lake Martin, in Dadeville, Alabama. The site is located in Tallapoosa County, Alabama.

This request is part of the Alabama Power Company's review process. Please review this area and the attached document and advise if there are any endangered, threatened, or proposed species protected under the Endangered Species Act. If there are no conflicts from your agency with our project we are requesting a clearance/concurrence letter. Please provide a letter or contact us with any written comments to this office within Thirty (30) days. Feel free to contact this office with any questions. Enclosed is the following information for your review:

1. Proposed Non-Residential FERC Construction Plan

Should you need additional information for the review of this site or have any questions, please do not hesitate to call.

Yours very truly,

Steven E. Speaks, P.E., P.L.S.

SES/cbb
Enclosures
Cc: file

U.S. Fish and Wildlife Service
1208-B Main Street – Daphne, Alabama 36526
Phone: 251-441-5181 Fax: 251-441-6222

No federally listed species/critical habitat are known to occur in the project area. IF PROJECT DESIGN CHANGES ARE MADE, PLEASE SUBMIT NEW PLANS FOR REVIEW. SITE MAY CONTAIN WETLANDS. Contact U.S. Army Corps of Engineers for a jurisdictional wetlands determination. We recommend the use of best management practices specific to your project (See http://www.fws.gov/daphne/section7/bmp.html).

William J. Pearson, Field Supervisor — Date SEP 09 2020 #4

ATTACHMENT F: ALABAMA DEPARTMENTOF CONSERVATION AND NATURAL RESOURCES – WILDLIFE AND FISHERIES DIVISION CONSULTATION AND RESPONSE

Document Accession #: 20201229-5039 Filed Date: 12/29/2020

STATE OF ALABAMA
DEPARTMENT OF CONSERVATION AND NATURAL RESOURCES
WILDLIFE AND FRESHWATER FISHERIES DIVISION

64 North Union Street, Ste. 567
P. O. Box 301456
Montgomery, AL 36130-1456
Phone: (334) 242-3465 Fax: (334) 242-3032
www.outdooralabama.com

KAY IVEY
GOVERNOR

CHRISTOPHER M. BLANKENSHIP
COMMISSIONER

EDWARD F. POOLOS
DEPUTY COMMISSIONER

The mission of the Wildlife and Freshwater Fisheries Division is to manage, protect, conserve, and enhance the wildlife and aquatic resources of Alabama for the sustainable benefit of the people of Alabama.

CHARLES F. "CHUCK" SYKES
DIRECTOR

FRED R. HARDERS
ASSISTANT DIRECTOR

September 4, 2020

Mr. Steven E. Speaks
Larry E. Speaks & Associates, Inc.
535 Herron Street
Montgomery, Alabama 36104

RE: Proposed FERC Permit Construction Plan
Lake Martin Land Company
Lake Martin, Dadeville, Alabama
Tallapoosa County

Dear Mr. Speaks

The Division of Wildlife and Freshwater Fisheries, Department of Conservation and Natural Resources has reviewed the above-referenced project and provides the following comments and recommendations:

- Based on the information in your letter dated August 7, 2020 and our own research, we have no objections to the proposed construction of five (5) proposed boat docks and one (1) boardwalk if proper erosion control and re-vegetation procedures are followed. Aquatic species in the County are sensitive to migration of sediments into lakes and streams. Eliminating and minimizing erosion and migration of sediments during construction at the site is beneficial to the conservation of this species.

- Federally-protected species are under the jurisdiction of the U. S. Fish and Wildlife Service. Please contact that agency regarding potential impacts to federally-protected species (251-441-5181).

- Impacts to shoreline habitat in Lake Martin can negatively impact aquatic, semi-aquatic, and terrestrial species. Studies have shown that undeveloped shoreline areas provide the most suitable habitat for maintaining abundance, diversity, and species richness of aquatic, semi-aquatic, and terrestrial species. We recommend that natural vegetated shorelines remain undisturbed to the greatest extent possible. If tree removal is necessary for the project, we recommend tree removal outside of bat roosting periods (after October 15), to avoid disturbing potential habitat for state-wide ranging protected bat species.

- The Migratory Bird Treaty Act (MBTA) prohibits the take of migratory birds, their nests, and eggs, except when specifically authorized by the Department of the Interior. Also, bald eagles are protected under the Bald and Golden Eagle Protection Act. ADCNR's finding that it does not appear this project will adversely affect any state or federally protected species does not exempt the project from federal provisions as listed under the MBTA or Bald and Golden Eagle Protection Act.

- No net loss of stream or wetland functions should occur as a result of the project. Adverse functional impacts may result from physical impacts to a stream or wetland, or from the alteration of a stream's

natural flow regime or the impairment of wetland hydrology. Adverse stream impacts requiring mitigation may include accelerated siltation resulting from improper construction or erosion control practices, stream realignment, flow diversion or interruption, the placement of riprap or other fill in the streambed in such a way that habitat functions are impaired or fish movement is impeded under low flow conditions, and other modifications of habitat or hydrology which reduce the density or diversity of aquatic species. If streams, ditches, or wetlands will be impacted by the proposed activity, the Mobile District, Army Corps of Engineers should be contacted at (251-690-3188) to determine if the activity falls under a Corps regulation requiring mitigation for adverse ecological, morphological, or hydrological impacts.

- We note that the applicant is proposing to construct a sea wall. We recommend the use of rip rap rather than sea walls to protect the shoreline from erosion. Rip rap better protects shallow water spawning, rearing and feeding habitat for fish and other aquatic species. If sea walls are deemed necessary over alternative shoreline erosion control measures, bulkhead APCO-PGP-5 guidelines in the Army Corps of Engineers, Programmatic General Permits for Minor Structures and Activities within the FERC Project Boundaries of the Alabama Power Company Reservoirs within the Coosa, Tallapoosa and Black Warrior River Basins in the State of Alabama are encouraged.

- Environmental impacts should be minimized prior to and during construction by strict adherence to proper erosion control and re-vegetation procedures. Installation and implementation of best management practices (BMPs), as outlined in the Alabama Handbook for Erosion Control, will aid in minimizing erosion and migration of sediments into the lake.

- State water quality standards (particularly those related to erosion control, water turbidity, and dissolved oxygen) should be strictly adhered to.

- Marine Police (1-800-432-7389), part of the Alabama Law Enforcement Agency, should be consulted regarding issues concerning public safety during construction.

We appreciate the opportunity to comment on this proposal. If you have any further questions, please contact me at 334-353-7484.

Sincerely,

Todd Fobian
Environmental Affairs Supervisor

The Department of Conservation and Natural Resources does not discriminate on the basis of race, color, religion, age, sex, national origin, disability, pregnancy, genetic information or veteran status in its hiring or employment practices nor in admission to, access to, or operations of its programs, services, or activities.

ATTACHMENT G: ALABAMA HISTORICAL COMMISSION CONSULTATION AND RESPONSE

Document Accession #: 20201229-5039 Filed Date: 12/29/2020

ALABAMA HISTORICAL COMMISSION

468 South Perry Street
P.O. Box 300900
Montgomery, Alabama 36130-0900
334-242-3184 / Fax: 334-240-3477

Lisa D. Jones
Executive Director
State Historic Preservation Officer

July 21, 2020

Unzell Kelley
P.O. Box 488
Wedowee, AL 36278

Re: AHC 20-1022
The Landing at Still Waters
Tallapoosa County

Dear Mr. Kelley:

Upon review of the above referenced project, we have determined that project activities will have no effect on cultural resources eligible for or listed on the National Register of Historic Places. Therefore, we concur with the proposed project activities.

Consultation with the State Historic Preservation Office does not constitute consultation with Tribal Historic Preservation Offices, other Native American tribes, local governments, or the public. If archaeological materials are encountered during construction, the procedures codified at 36 CFR 800.13(b) will apply. Archaeological materials consist of any items, fifty years old or older, which were made or used by man. These items include but are not limited to, stone projectile points (arrowheads), ceramic sherds, bricks, worked wood, bone and stone, metal, and glass objects. The federal agency or the applicant receiving federal assistance should contact our office immediately. If human remains are encountered, the provisions of the Alabama Burial Act (*Code of Alabama* 1975, §13A-7-23.1, as amended; Alabama Historical Commission Administrative Code Chapter 460-X-10 Burials) should be followed. This stipulation shall be placed on the construction plans to insure contractors are aware of it.

We appreciate your commitment to helping us preserve Alabama's historic archaeological and architectural resources. Should you have any questions, please contact Eric Sipes at 334.230.2667 or Eric.Sipes@ahc.alabama.gov. Have the AHC tracking number referenced above available and include it with any future correspondence.

Sincerely,

Lee Anne Wofford

Lee Anne Wofford
Deputy State Historic Preservation Officer

LAW/EDS/law

ATTACHMENT H: ALABAMA LAW ENFORCEMENT AGENCY – MARINE POLICE DIVISION CONSULTATION AND RESPONSE

Cole Burdett

From: Kelley, Unzell <UKELLEY@southernco.com>
Sent: Tuesday, September 15, 2020 11:48 AM
To: Cole Burdett
Subject: FW: Lake Martin Dadeville Project Proposal - Speake Associates
Attachments: LakeMartinDadevilleProjectSpeakeAssociates.pdf

Cole,

Per your request, I am forwarding an email from the Marine Police that has responses attached from the neighbor consultation process. Also, below you will see a response from Matt Brooks, Deputy Chief of the ALEA Marine Patrol Division in regards to the proposed design and development of the Landing at Still Waters.

Thanks,

UK

From: Bearden, Justin <JBEARDEN@SOUTHERNCO.COM>
Sent: Thursday, September 10, 2020 3:36 PM
To: Kelley, Unzell <UKELLEY@southernco.com>
Cc: Smith, Sheila C. <SCSMITH@southernco.com>
Subject: FW: Lake Martin Dadeville Project Proposal - Speake Associates

FYI...

From: Brooks, Matt <Matt.Brooks@alea.gov>
Sent: Thursday, September 10, 2020 3:19 PM
To: Bearden, Justin <JBEARDEN@SOUTHERNCO.COM>
Cc: Thompson, Walter <Steve.Thompson@alea.gov>; Fuller, Mark <Mark.Fuller@alea.gov>; Mcwaters, Steven <Steven.Mcwaters@alea.gov>
Subject: Lake Martin Dadeville Project Proposal - Speake Associates

EXTERNAL MAIL: Caution Opening Links or Files

Good Afternoon Mr. Bearden:

Attached is a request for input for a proposed project on Lake Martin in Dadeville that was sent to us directly from Speake Associates. I am also including a couple of letters from citizens who expressed their concerns to us about this project.

Our sole interest in any development project is with regard to a potential negative impact to overall boating safety or with any hazards that the project may create. We have reviewed the plans and proposal for the project and at this time can see no negative impact or potential hazard that this project may create with regard to overall boating safety. As outlined in the papers provided to us, the project also does not appear to create a problem with ingress and egress for existing docks.

If you have any questions or need anything else from us with regard to this matter, please let me know.

Respectfully,

Matt Brooks

Deputy Chief Matt Brooks
ALEA Marine Patrol Division
Office: (334) 517-2941
Mobile: (334) 315-3112

Total Control Panel Login

To: cburdett@lespeaks.com Remove this sender from my allow list
From: ukelley@southernco.com

You received this message because the sender is on your allow list.

ATTACHMENT I: UNITED STATES ARMY CORPS OF ENGINEERS CONSULTATION AND RESPONSE(NOT REQUIRED)

ATTACHMENT J: NEIGHBOR CONSULTATIONS AND RESPONSES

Parcel Ownership - The Landing at Stillwaters

Copyright 2020
Alabama Power Company
All Rights Reserved

Alabama

100 50 0 100 200 300 400 500 600
Feet

N W E S

Document Accession #: 20201229-5039 Filed Date: 12/29/2020

LARRY E. SPEAKS & ASSOCIATES, INC.
CONSULTING ENGINEERS & LAND SURVEYORS
535 Herron Street
Montgomery, Alabama 36104
Telephone: 334.262.1091
Facsimile: 334.262.2211

AIRPORTS
BRIDGE DESIGN
CONSTRUCTION MANAGEMENT
ENVIRONMENTAL PERMITS
HIGHWAY DESIGN
LAND DEVELOPMENT PLANNING & DESIGN
LAND USE STUDIES
MUNICIPAL WORKS
PARKS & RECREATION FACILITIES

SEWAGE COLLECTION, TREATMENT & DISPOSAL
SOLID WASTE LANDFILLS
STORM DRAINAGE STUDIES & DESIGN
SUBDIVISIONS
SURVEYING: LAND SURVEYS
CONSTRUCTION SURVEYS
TOPOGRAPHIC MAPS
WATER SUPPLY, TREATMENT & DISTRIBUTION

August 7, 2020

Sarkis H. Kavookjian
116 South Cardinal Heights
Dadeville, AL 36853

RE: Proposed FERC Permit Construction Plan
Lake Martin Land Company
Lake Martin, Dadeville, Alabama
Tallapoosa County

Dear Mr. Kavookjian:

You are receiving this letter and attached Non-Residential FERC permit Construction Plan because you are an adjacent landowner to the above referenced project. On behalf of the developer, Lake Martin Land Company, we request your comments regarding the construction of five (5) proposed boat docks and one (1) boardwalk on Lake Martin, in Dadeville, Alabama. The site is located in Tallapoosa County, Alabama.

This request is part of the Alabama Power Company's review process. Please review the enclosed plan and return written comments to this office within Thirty (30) days. Feel free to contact this office with any questions.

Yours very truly,

Steven E. Speaks

Steven E. Speaks, P.E., P.L.S.

SES/cbb
Enclosures
Cc: file

Document A

SENDER: COMPLETE THIS SECTION

- Complete items 1, 2, and 3.
- Print your name and address on the reverse so that we can return the card to you.
- Attach this card to the back of the mailpiece, or on the front if space permits.

1 Article Addressed to:

Sarkis H. Kavookjian
116 South Cardinal Heights
Dadeville, AL 36853

9590 9402 4414 8248 9945 75

2. Article Number *(Transfer from service label)*
7007 2560 0003 0312 3263

COMPLETE THIS SECTION ON DELIVERY

A. Signature
X [signature] ☐ Agent ☐ Addressee

B. Received by *(Printed Name)* [illegible] C. Date of Delivery 8-13-20

D. Is delivery address different from item 1? ☐ Yes
If YES, enter delivery address below: ☐ No

3. Service Type
- ☐ Adult Signature
- ☐ Adult Signature Restricted Delivery
- ☑ Certified Mail®
- ☐ Certified Mail Restricted Delivery
- ☐ Collect on Delivery
- ☐ Collect on Delivery Restricted Delivery
- ☐ Insured Mail
- ☐ Insured Mail Restricted Delivery (over $500)
- ☐ Priority Mail Express®
- ☐ Registered Mail™
- ☐ Registered Mail Restricted Delivery
- ☐ Return Receipt for Merchandise
- ☐ Signature Confirmation™
- ☐ Signature Confirmation Restricted Delivery

PS Form 3811, July 2015 PSN 7530-02-000-9053 Domestic Return Receipt

7007 2560 0003 0312 3263

U.S. Postal Service™
CERTIFIED MAIL™ RECEIPT
(Domestic Mail Only; No Insurance Coverage Provided)

For delivery information visit our website at www.usps.com®

OFFICIAL USE

Postage	$ 1.40
Certified Fee	3.55
Return Receipt Fee (Endorsement Required)	2.85
Restricted Delivery Fee (Endorsement Required)	
Total Postage & Fees	$ 7.80

DOWNTOWN STATION AUG 11 2020 36104-9998
Postmark Here

Sent To *Sarkis H. Kavookjian*
Street, Apt. N *116 South Cardinal Heights*
or PO Box N
City, State, Z *Dadeville, AL 36853*

PS Form 3800, August 2006 See Reverse for Instructions

116 S. Cardinal Heights
Dadeville, AL 36853
September 13, 2020

Steven E. Speaks
Larry E. Speaks & Associates, Inc.
535 Herron Street
Montgomery, AL 36104

Dear Mr. Speaks:

My neighbor, Buck Stevens has offered to help me with my letter of objection to the plan to add additional docks and parking spaces to the slough near the homes on S. Cardinal Hts since I am unable to handle it myself. The plan is an addition to the construction of docks and boardwalks already approved for the eastern side of the development.

This addition to the overall plan will be asking for multi-use docks throughout our slough for non-residential lots adding five (5) additional docks as well as an extended boardwalk along the sea wall. The combined dock and parallel boat parking will add up to 32 additional boats plus an unknown, likely large number of Jet Skis, to our already crowded slough. I find it interesting that the larger extended docks already permitted are not shown on the drawing, which would show just how crowded the small area will become if the plan is approved. There are 6 docks already finished or under construction on lots 9 though 14. If lots 15-17 which are waterfront lots each have a dock there will be only an extremely small distance from those docks and the seawall of the non-waterfront lots at the north end of the slough even without having a boat tied parallel to the sea wall. A drawing, map or plan showing all of the proposed docks would show just how crowded the slough will become if the plan is approved.

The amount of boat traffic will be excessive and unsafe for the size of this slough. The addition of 32 additional docking spaces plus what we already have will be pushing 55-60 boats and Jet Skis in this small space plus the holiday traffic and other busy weekends will create an unsafe boating condition of the first magnitude for boaters and people swimming in the cove near their own docks.

The big picture plan of this development is what I have reviewed and I strongly object to it on both size and density. The developer's proposal for more slips than home sites effectively turns this small slough into a private marina. To allow almost 60 watercraft parking spots in this small slough would set an extremely bad precedent for StillWaters and Lake Martin. Lake Martin is a *Treasure of Alabama* and should not become the next Lake Lanier from Georgia, a dangerous and overcrowded lake!

No residential development should be allowed to build a mini-Marina in a residential slough for non-waterfront homes. This is not a condo complex. **I request that the developer drastically scale back their plans to ONLY have a boardwalk. No multi-slip docks should be built in the back of the slough for non-waterfront homeowners and parking along the sea wall should not be allowed.**

Sincerely,

Sark Kavookjian

CC:
Rhett Hanks, Lake Martin Shoreline Manager, Alabama Power, 1296 Tallassee Street, Dadeville, AL 36853
Billy Edge, Land Supervisor, P.O. Box 2641, Birmingham, AL 35203-2206
Angie Noel, Director of Shoreline, Leasing & Sales, P.O. Box 2641, Birmingham, AL 35203-2206
Gordon Martin, Senior VP of Corporate & Administrative Services. P.O. Box 2641, Birmingham, AL 35203-2206
Lt. Mark Fuller, Central District Marine Police Commander, 126 Marina Road, Alexander City, AL 35010
Mark Crosswhite, President & CEO, Alabama Power Company, P.O. Box 2641, Birmingham, AL 35203-2206
Thomas A. Fanning, President & CEO, The Southern Company, 30 Ivan Allen Jr. Blvd., NW, Atlanta, GA 30308

Document Accession #: 20201229-5039 Filed Date: 12/29/2020

LARRY E. SPEAKS & ASSOCIATES, INC.
CONSULTING ENGINEERS & LAND SURVEYORS
535 Herron Street
Montgomery, Alabama 36104
Telephone: 334.262.1091
Facsimile: 334.262.2211

AIRPORTS
BRIDGE DESIGN
CONSTRUCTION MANAGEMENT
ENVIRONMENTAL PERMITS
HIGHWAY DESIGN
LAND DEVELOPMENT PLANNING & DESIGN
LAND USE STUDIES
MUNICIPAL WORKS
PARKS & RECREATION FACILITIES

SEWAGE COLLECTION, TREATMENT & DISPOSAL
SOLID WASTE LANDFILLS
STORM DRAINAGE STUDIES & DESIGN
SUBDIVISIONS
SURVEYING: LAND SURVEYS
CONSTRUCTION SURVEYS
TOPOGRAPHIC MAPS
WATER SUPPLY, TREATMENT & DISTRIBUTION

October 1, 2020

Sarkis H. Kavookjian
116 South Cardinal Heights
Dadeville, AL 36853

RE: Proposed FERC Permit Construction Plan
Lake Martin Land Company
Lake Martin, Dadeville, Alabama
Tallapoosa County

Dear Mr. Kavookjian:

We are in receipt of your letter concerning the above referenced project on Lake Martin. We appreciate your feedback and for taking the time to review the proposed Construction Plan. This project has been submitted to APCO and numerous federal and state agencies for review and comment. We have reviewed the items in the letter with the developer and offer the following responses:

The proposed dock plan is configured to meet the APCO and FERC guidelines. The proposed dock footprints meet set back and length restrictions as well as total square footage restrictions. This plan meets the regulated restrictions. The other waterfront lots labeled (Not a Part) will be permitted locally by APCO and meet applicable permitting guidelines.

The proposed docks will be for use by specific property owners and their guests, it will not be available for public use.

We thank you for your questions and comments. The developer plans to work with all the neighbors in this area. The developer will be glad to answer any additional questions.

Yours very truly,

Steven E. Speaks, PE, PLS, FACEC
cc. Mr. J.R Adams, LMLC

Document Accession #: 20201229-5039 Filed Date: 12/29/2020

LARRY E. SPEAKS & ASSOCIATES, INC.
CONSULTING ENGINEERS & LAND SURVEYORS
535 Herron Street
Montgomery, Alabama 36104
Telephone: 334.262.1091
Facsimile: 334.262.2211

AIRPORTS
BRIDGE DESIGN
CONSTRUCTION MANAGEMENT
ENVIRONMENTAL PERMITS
HIGHWAY DESIGN
LAND DEVELOPMENT PLANNING & DESIGN
LAND USE STUDIES
MUNICIPAL WORKS
PARKS & RECREATION FACILITIES

SEWAGE COLLECTION, TREATMENT & DISPOSAL
SOLID WASTE LANDFILLS
STORM DRAINAGE STUDIES & DESIGN
SUBDIVISIONS
SURVEYING: LAND SURVEYS
CONSTRUCTION SURVEYS
TOPOGRAPHIC MAPS
WATER SUPPLY, TREATMENT & DISTRIBUTION

August 7, 2020

Robert E. White
116 North Cardinal Heights
Dadeville, AL 36853

RE: Proposed FERC Permit Construction Plan
Lake Martin Land Company
Lake Martin, Dadeville, Alabama
Tallapoosa County

Dear Mr. White:

You are receiving this letter and attached Non-Residential FERC permit Construction Plan because you are an adjacent landowner to the above referenced project. On behalf of the developer, Lake Martin Land Company, we request your comments regarding the construction of five (5) proposed boat docks and one (1) boardwalk on Lake Martin, in Dadeville, Alabama. The site is located in Tallapoosa County, Alabama.

This request is part of the Alabama Power Company's review process. Please review the enclosed plan and return written comments to this office within Thirty (30) days. Feel free to contact this office with any questions.

Yours very truly,

Steven E. Speaks

Steven E. Speaks, P.E., P.L.S.

SES/cbb
Enclosures
Cc: file

SENDER: COMPLETE THIS SECTION

- Complete items 1, 2, and 3.
- Print your name and address on the reverse so that we can return the card to you.
- Attach this card to the back of the mailpiece, or on the front if space permits.

1. Article Addressed to:

Robert E. White
116 North Cardinal Heights
Dadeville, AL 36853

9590 9402 4414 8248 9994 95

2. Article Number *(Transfer from service label)*
7007 2560 0003 0312 3355

COMPLETE THIS SECTION ON DELIVERY

A. Signature
X Ezell B. White ☐ Agent ☐ Addressee

B. Received by *(Printed Name)* Ezell B. White
C. Date of Delivery 8-13-20

D. Is delivery address different from item 1? ☐ Yes
If YES, enter delivery address below: ☐ No

3. Service Type
- ☐ Adult Signature
- ☐ Adult Signature Restricted Delivery
- ☑ Certified Mail®
- ☐ Certified Mail Restricted Delivery
- ☐ Collect on Delivery
- ☐ Collect on Delivery Restricted Delivery
- ☐ Insured Mail
- ☐ Insured Mail Restricted Delivery (over $500)
- ☐ Priority Mail Express®
- ☐ Registered Mail™
- ☐ Registered Mail Restricted Delivery
- ☐ Return Receipt for Merchandise
- ☐ Signature Confirmation™
- ☐ Signature Confirmation Restricted Delivery

PS Form 3811, July 2015 PSN 7530-02-000-9053 Domestic Return Receipt

7007 2560 0003 0312 3355

U.S. Postal Service™
CERTIFIED MAIL™ RECEIPT
(Domestic Mail Only; No Insurance Coverage Provided)

For delivery information visit our website at www.usps.com®

OFFICIAL USE

Postage	$ 1.40
Certified Fee	3.55
Return Receipt Fee (Endorsement Required)	2.85
Restricted Delivery Fee (Endorsement Required)	
Total Postage & Fees	$ 7.80

DOWNTOWN STATION AUG 17 2020 Postmark Here 36104-999

Sent To *Robert E. White*
Street, Apt. No.; or PO Box No. *116 North Cardinal Heights*
City, State, ZIP+4 *Dadeville, AL 36853*

PS Form 3800, August 2006 See Reverse for Instructions

Larry Speaks & Associates. Inc.
535 Herron Street
Montgomery, Al 36104

RE: PROPOSED FERC PERMIT CONSTRUCTION PLAN
Lake Martin Land Company
Lake Martin, Dadeville, Alabama
Tallapoosa County

Dear Mr. Speaks,
We are responding to the certified mailing we received, concerning the permit request for 32 additional docking spaces by The Landing at Stillwaters.

With our neighbors, we would like to express our objection and concerns for this permit request of these additions to our cove.

With regards,

Bob + Ezell White
Bob and Ezell White
116 N. Cardinal Heights
Dadeville, Al. 36853

Jimmie Mullis
Jimmie Mullis
134 N. Cardinal Heights
Dadeville, Al. 36853

cc: General Manager, Kevin Eason
Board of Directors
Stillwaters Residential Association
1816 Stillwaters Drive
Dadeville, Al. 36853

Angie Noel, Director
Alabama Power Shorelines Management
P.O. Box 2641
Birmingham, Al. 35203-2206

Rhett Hanks
Alabama Power
Lake Martin Shoreline
1296 Tallassee Street
Dadeville , Al 36853

Lt. Mark Fuller
Marine Police
126 Marina Road
Alexander City, Al
35010

Document Accession #: 20201229-5039 Filed Date: 12/29/2020

LARRY E. SPEAKS & ASSOCIATES, INC.
CONSULTING ENGINEERS & LAND SURVEYORS
535 Herron Street
Montgomery, Alabama 36104
Telephone: 334.262.1091
Facsimile: 334.262.2211

AIRPORTS
BRIDGE DESIGN
CONSTRUCTION MANAGEMENT
ENVIRONMENTAL PERMITS
HIGHWAY DESIGN
LAND DEVELOPMENT PLANNING & DESIGN
LAND USE STUDIES
MUNICIPAL WORKS
PARKS & RECREATION FACILITIES

SEWAGE COLLECTION, TREATMENT & DISPOSAL
SOLID WASTE LANDFILLS
STORM DRAINAGE STUDIES & DESIGN
SUBDIVISIONS
SURVEYING: LAND SURVEYS
CONSTRUCTION SURVEYS
TOPOGRAPHIC MAPS
WATER SUPPLY, TREATMENT & DISTRIBUTION

October 1, 2020

Robert E. White
116 North Cardinal Heights
Dadeville, AL 36853

RE: Proposed FERC Permit Construction Plan
Lake Martin Land Company
Lake Martin, Dadeville, Alabama
Tallapoosa County

Dear Mr. White:

We are in receipt of your letter concerning the above referenced project on Lake Martin. We appreciate your feedback and for taking the time to review the proposed Construction Plan. This project has been submitted to APCO and numerous federal and state agencies for review and comment. We have reviewed the items in the letter with the developer and offer the following responses:

The proposed dock plan is configured to meet the APCO and FERC guidelines. The proposed dock footprints meet set back and length restrictions as well as total square footage restrictions. This plan meets the regulated restrictions. The other waterfront lots labeled (Not a Part) will be permitted locally by APCO and meet applicable permitting guidelines.

The proposed docks will be for use by specific property owners in this plat and their guests, it will not be available for public use.

We thank you for your questions and comments. The developer plans to work with all the neighbors in this area. The developer will be glad to answer any additional questions.

Yours very truly,

Steven E. Speaks, PE, PLS, FACEC
cc. Mr. J.R Adams, LMLC

Document Accession #: 20201229-5039 Filed Date: 12/29/2020

LARRY E. SPEAKS & ASSOCIATES, INC.
CONSULTING ENGINEERS & LAND SURVEYORS
535 Herron Street
Montgomery, Alabama 36104
Telephone: 334.262.1091
Facsimile: 334.262.2211

AIRPORTS
BRIDGE DESIGN
CONSTRUCTION MANAGEMENT
ENVIRONMENTAL PERMITS
HIGHWAY DESIGN
LAND DEVELOPMENT PLANNING & DESIGN
LAND USE STUDIES
MUNICIPAL WORKS
PARKS & RECREATION FACILITIES

SEWAGE COLLECTION, TREATMENT & DISPOSAL
SOLID WASTE LANDFILLS
STORM DRAINAGE STUDIES & DESIGN
SUBDIVISIONS
SURVEYING: LAND SURVEYS
CONSTRUCTION SURVEYS
TOPOGRAPHIC MAPS
WATER SUPPLY, TREATMENT & DISTRIBUTION

August 7, 2020

William L. Stevens
113 South Cardinal Heights
Dadeville, AL 36853

RE: Proposed FERC Permit Construction Plan
Lake Martin Land Company
Lake Martin, Dadeville, Alabama
Tallapoosa County

Dear Mr. Stevens:

You are receiving this letter and attached Non-Residential FERC permit Construction Plan because you are an adjacent landowner to the above referenced project. On behalf of the developer, Lake Martin Land Company, we request your comments regarding the construction of five (5) proposed boat docks and one (1) boardwalk on Lake Martin, in Dadeville, Alabama. The site is located in Tallapoosa County, Alabama.

This request is part of the Alabama Power Company's review process. Please review the enclosed plan and return written comments to this office within Thirty (30) days. Feel free to contact this office with any questions.

Yours very truly,

Steven E. Speaks, P.E., P.L.S.

SES/cbb
Enclosures
Cc: file

Document Accessi

SENDER: COMPLETE THIS SECTION

- Complete items 1, 2, and 3.
- Print your name and address on the reverse so that we can return the card to you.
- Attach this card to the back of the mailpiece, or on the front if space permits.

1. Article Addressed to:

William L. Stevens
113 South Cardinal Heights
Dadeville, AL 36853

9590 9402 4414 8248 9945 68

2. Article Number *(Transfer from service label)*
7007 2560 0003 0312 3270

COMPLETE THIS SECTION ON DELIVERY

A. Signature
x W L Stevens
☐ Agent
☐ Addressee

B. Received by *(Printed Name)* WM L. STEVENS
C. Date of Delivery 8.13.20

D. Is delivery address different from item 1? ☐ Yes
If YES, enter delivery address below: ☐ No

3. Service Type
☐ Adult Signature
☐ Adult Signature Restricted Delivery
☑ Certified Mail®
☐ Certified Mail Restricted Delivery
☐ Collect on Delivery
☐ Collect on Delivery Restricted Delivery
☐ Insured Mail
☐ Insured Mail Restricted Delivery (over $500)
☐ Priority Mail Express®
☐ Registered Mail™
☐ Registered Mail Restricted Delivery
☐ Return Receipt for Merchandise
☐ Signature Confirmation™
☐ Signature Confirmation Restricted Delivery

PS Form 3811, July 2015 PSN 7530-02-000-9053 Domestic Return Receipt

7007 2560 0003 0312 3270

U.S. Postal Service™
CERTIFIED MAIL™ RECEIPT
(Domestic Mail Only; No Insurance Coverage Provided)

For delivery information visit our website at www.usps.com®

OFFICIAL USE

Postage	$ 1.40
Certified Fee	3.55
Return Receipt Fee (Endorsement Required)	2.85
Restricted Delivery Fee (Endorsement Required)	
Total Postage & Fees	$ 7.80

DOWNTOWN STATION
Postmark Here
AUG 1 2020
36104-9998

Sent To *William L. Stevens*
Street, Apt. No.; or PO Box No. *113 South Cardinal Heights*
City, State, ZIP+ *Dadeville, AL 36853*

PS Form 3800, August 2006 See Reverse for Instructions

113 S. Cardinal Heights
Dadeville, AL 36853
September 13, 2020

Steven E. Speaks
Larry E. Speaks & Associates, Inc.
535 Herron Street
Montgomery, AL 36104

Dear Mr. Speaks:

I enjoyed speaking with you this past Friday, September 11 and learning that everyone still has time to send you a letter of our objections and deep concerns to the proposed non-residential FERC construction plan attached to your letter dated August 7, 2020. You may not know that this plan was NOT presented in the meeting the builders presented a little over a year ago to primarily the sough owners affected by the new construction. It is an addition to the construction of docks and boardwalks already approved for the eastern side of the development.

This addition to the overall plan will be asking for multi-use docks throughout our slough for non-residential lots adding five (5) additional docks as well as an extended boardwalk along the sea wall. The combined dock and parallel boat parking will add up to 32 additional boats plus an unknown, likely large number of Jet Skis, to our already crowded slough. I find it interesting that the larger extended docks already permitted are not shown on the drawing, which would show just how crowded the small area will become if the plan is approved. There are 6 docks already finished or under construction on lots 9 though 14. If lots 15-17 which are waterfront lots each have a dock there will be only an extremely small distance from those docks and the seawall of the non-waterfront lots at the north end of the slough even without having a boat tied parallel to the sea wall. A drawing, map or plan showing all of the proposed docks would show just how crowded the slough will become if the plan is approved.

The amount of boat traffic will be excessive and unsafe for the size of this slough. The addition of 32 additional docking spaces plus what we already have will be pushing 55-60 boats and Jet Skis in this small space plus the holiday traffic and other busy weekends will create an unsafe boating condition of the first magnitude for boaters and people swimming in the cove near their own docks.

The big picture plan of this development is what we have reviewed and my wife and I along with every resident of S. Cardinal Hts that I've spoken with strongly object to it on both size and density. The developer's proposal for more slips than home sites effectively turns this small slough into a private marina. To allow almost 60 watercraft parking spots in this small slough would set an extremely bad precedent for StillWaters and Lake Martin. Lake Martin is a *Treasure of Alabama* and should not become the next Lake Lanier from Georgia, a dangerous and overcrowded lake!

No residential development should be allowed to build a mini-Marina in a residential slough for non-waterfront homes. This is not a condo complex. **My wife and I request that the developer drastically scale back their current plans and to ONLY have a boardwalk. Additionally, No multi-slip docks should be built in the back of the slough for non-waterfront homeowners and parking along the sea wall should not be allowed.**

Sincerely,

William L. Stevens

William L. (Buck) Stevens

CC:
Rhett Hanks, Lake Martin Shoreline Manager, Alabama Power, 1296 Tallassee Street, Dadeville, AL 36853
Billy Edge, Land Supervisor, P.O. Box 2641, Birmingham, AL 35203-2206
Angie Noel, Director of Shoreline, Leasing & Sales, P.O. Box 2641, Birmingham, AL 35203-2206
Gordon Martin, Senior VP of Corporate & Administrative Services. P.O. Box 2641, Birmingham, AL 35203-2206
Lt. Mark Fuller, Central District Marine Police Commander, 126 Marina Road, Alexander City, AL 35010
Mark Crosswhite, President & CEO, Alabama Power Company, P.O. Box 2641, Birmingham, AL 35203-2206
Thomas A. Fanning, President & CEO, The Southern Company, 30 Ivan Allen Jr. Blvd., NW, Atlanta, GA 30308

Document Accession #: 20201229-5039 Filed Date: 12/29/2020

LARRY E. SPEAKS & ASSOCIATES, INC.
CONSULTING ENGINEERS & LAND SURVEYORS
535 Herron Street
Montgomery, Alabama 36104
Telephone: 334.262.1091
Facsimile: 334.262.2211

AIRPORTS
BRIDGE DESIGN
CONSTRUCTION MANAGEMENT
ENVIRONMENTAL PERMITS
HIGHWAY DESIGN
LAND DEVELOPMENT PLANNING & DESIGN
LAND USE STUDIES
MUNICIPAL WORKS
PARKS & RECREATION FACILITIES

SEWAGE COLLECTION, TREATMENT & DISPOSAL
SOLID WASTE LANDFILLS
STORM DRAINAGE STUDIES & DESIGN
SUBDIVISIONS
SURVEYING: LAND SURVEYS
CONSTRUCTION SURVEYS
TOPOGRAPHIC MAPS
WATER SUPPLY, TREATMENT & DISTRIBUTION

October 1, 2020

William L. Stevens
113 South Cardinal Heights
Dadeville, AL 36853

RE: Proposed FERC Permit Construction Plan
Lake Martin Land Company
Lake Martin, Dadeville, Alabama
Tallapoosa County

Dear Mr. Stevens:

We are in receipt of your letter concerning the above referenced project on Lake Martin. We appreciate your feedback and for taking the time to review the proposed Construction Plan. This project has been submitted to APCO and numerous federal and state agencies for review and comment. We have reviewed the items in the letter with the developer and offer the following responses:

The proposed dock plan is configured to meet the APCO and FERC guidelines. The proposed dock footprints meet set back and length restrictions as well as total square footage restrictions. This plan meets the regulated restrictions. The other waterfront lots labeled (Not a Part) will be permitted locally by APCO and meet applicable permitting guidelines.

The proposed docks will be for use by specific property owners in this plat and their guests, it will not be available for public use.

ALEA Marine Patrol Enforcement is one of the agencies the Developer notified in this process. The developer reached out to ALEA inquiring about the possibility of a no wake buoy for the slough. ALEA denied the request as the project does not meet the guidelines/requirements for a no wake buoy.

We thank you for your questions and comments. The developer plans to work with all the neighbors in this area. The developer will be glad to answer any additional questions.

Yours very truly,

Steven E. Speaks, PE, PLS, FACEC

cc. Mr. J.R Adams, LMLC

Document Accession #: 20201229-5039 Filed Date: 12/29/2020

LARRY E. SPEAKS & ASSOCIATES, INC.
CONSULTING ENGINEERS & LAND SURVEYORS
535 Herron Street
Montgomery, Alabama 36104
Telephone: 334.262.1091
Facsimile: 334.262.2211

AIRPORTS
BRIDGE DESIGN
CONSTRUCTION MANAGEMENT
ENVIRONMENTAL PERMITS
HIGHWAY DESIGN
LAND DEVELOPMENT PLANNING & DESIGN
LAND USE STUDIES
MUNICIPAL WORKS
PARKS & RECREATION FACILITIES

SEWAGE COLLECTION, TREATMENT & DISPOSAL
SOLID WASTE LANDFILLS
STORM DRAINAGE STUDIES & DESIGN
SUBDIVISIONS
SURVEYING: LAND SURVEYS
CONSTRUCTION SURVEYS
TOPOGRAPHIC MAPS
WATER SUPPLY, TREATMENT & DISTRIBUTION

August 7, 2020

William Guy Hartness
84 North Cardinal Heights
Dadeville, AL 36853

RE: Proposed FERC Permit Construction Plan
Lake Martin Land Company
Lake Martin, Dadeville, Alabama
Tallapoosa County

Dear Mr. Hartness:

You are receiving this letter and attached Non-Residential FERC permit Construction Plan because you are an adjacent landowner to the above referenced project. On behalf of the developer, Lake Martin Land Company, we request your comments regarding the construction of five (5) proposed boat docks and one (1) boardwalk on Lake Martin, in Dadeville, Alabama. The site is located in Tallapoosa County, Alabama.

This request is part of the Alabama Power Company's review process. Please review the enclosed plan and return written comments to this office within Thirty (30) days. Feel free to contact this office with any questions.

Yours very truly,

Steven E. Speaks, P.E., P.L.S.

SES/cbb
Enclosures
Cc: file

Document Access

SENDER: COMPLETE THIS SECTION

- Complete items 1, 2, and 3.
- Print your name and address on the reverse so that we can return the card to you.
- Attach this card to the back of the mailpiece, or on the front if space permits.

1. Article Addressed to:

William Guy Hartness
84 North Cardinal Heights
Dadeville, AL 36853

9590 9402 4414 8248 9995 01

2. Article Number *(Transfer from service label)*
7007 2560 0003 0312 3348

COMPLETE THIS SECTION ON DELIVERY

A. Signature
X [signature] ☐ Agent ☐ Addressee

B. Received by *(Printed Name)* Guy HARTNESS
C. Date of Delivery 8-13-20

D. Is delivery address different from item 1? ☐ Yes
If YES, enter delivery address below: ☐ No

3. Service Type
☐ Adult Signature
☐ Adult Signature Restricted Delivery
☑ Certified Mail®
☐ Certified Mail Restricted Delivery
☐ Collect on Delivery
☐ Collect on Delivery Restricted Delivery
☐ Insured Mail
☐ Insured Mail Restricted Delivery (over $500)
☐ Priority Mail Express®
☐ Registered Mail™
☐ Registered Mail Restricted Delivery
☐ Return Receipt for Merchandise
☐ Signature Confirmation™
☐ Signature Confirmation Restricted Delivery

PS Form 3811, July 2015 PSN 7530-02-000-9053 — Domestic Return Receipt

7007 2560 0003 0312 3348

U.S. Postal Service™
CERTIFIED MAIL™ RECEIPT
(Domestic Mail Only; No Insurance Coverage Provided)

For delivery information visit our website at www.usps.com®

OFFICIAL USE

Postage	$ 1.40
Certified Fee	3.55
Return Receipt Fee (Endorsement Required)	2.85
Restricted Delivery Fee (Endorsement Required)	
Total Postage & Fees	$ 7.80

DOWNTOWN STATION
Postmark Here
AUG 11 2020
36104-9996

Sent To *William Guy Hartness*
Street, Apt. No.; or PO Box No. *84 North Cardinal Heights*
City, State, ZIP+4 *Dadeville, AL 36853*

PS Form 3800, August 2006 — See Reverse for Instructions

August 31, 2020

Larry E, Speaks & Associates, Inc.
Consulting Engineers & Land Surveyors
535 Herron St
Montgomery, AL 36104

RE: Proposed FERC Permit Construction Plan
Lake Martin Land Company

Dear Sir(s):

In response to your letter of August 7, 2020 I am giving "my opinion" on the above subject.

The proposed housing development was approved by the StillWaters Homeowners Board without the approval of the property owners. I think this is was in violation of our covenants. Any Board Member voting to allow this change should resign. I doubt if any property owner would have built/bought with a Marina at their back door. This is a small cove which could result in noise not wanted by property owners. I can not support any further intrusion on our rights as property owners. It was admitted this development was proposed to lower a bank loan.

I am against the proposed construction of these boat docks

Yours truly

Guy Hartness
84 N Cardinal Hts

Cc: StillWaters Homeowners Association
Alabama Power Co.

Document Accession #: 20201229-5039 Filed Date: 12/29/2020

LARRY E. SPEAKS & ASSOCIATES, INC.
CONSULTING ENGINEERS & LAND SURVEYORS
535 Herron Street
Montgomery, Alabama 36104
Telephone: 334.262.1091
Facsimile: 334.262.2211

AIRPORTS
BRIDGE DESIGN
CONSTRUCTION MANAGEMENT
ENVIRONMENTAL PERMITS
HIGHWAY DESIGN
LAND DEVELOPMENT PLANNING & DESIGN
LAND USE STUDIES
MUNICIPAL WORKS
PARKS & RECREATION FACILITIES

SEWAGE COLLECTION, TREATMENT & DISPOSAL
SOLID WASTE LANDFILLS
STORM DRAINAGE STUDIES & DESIGN
SUBDIVISIONS
SURVEYING: LAND SURVEYS
CONSTRUCTION SURVEYS
TOPOGRAPHIC MAPS
WATER SUPPLY, TREATMENT & DISTRIBUTION

October 1, 2020

William Guy Hartness
84 North Cardinal Heights
Dadeville, AL 36853

RE: Proposed FERC Permit Construction Plan
Lake Martin Land Company
Lake Martin, Dadeville, Alabama
Tallapoosa County

Dear Mr. Hartness:

We are in receipt of your letter dated August 31, 2020, concerning the above referenced project on Lake Martin. We appreciate your feedback and for taking the time to review the proposed Construction Plan. This project has been submitted to APCO and numerous federal and state agencies for review and comment. We have reviewed the items in the letter with the developer and offer the following responses:

The proposed dock plan is configured to meet the APCO and FERC guidelines. The proposed dock footprints meet set back and length restrictions as well as total square footage restrictions. This plan meets the regulated restrictions.

The proposed docks will be for use by specific property owners in this plat and their guests, it will not be available for public use.

We thank you for your questions and comments. The developer plans to work with all the neighbors in this area. The developer will be glad to answer any additional questions.

Yours very truly,

Steven E. Speaks, PE, PLS, FACEC

cc. Mr. J.R Adams

Document Accession #: 20201229-5039 Filed Date: 12/29/2020

LARRY E. SPEAKS & ASSOCIATES, INC.
CONSULTING ENGINEERS & LAND SURVEYORS
535 Herron Street
Montgomery, Alabama 36104
Telephone: 334.262.1091
Facsimile: 334.262.2211

AIRPORTS
BRIDGE DESIGN
CONSTRUCTION MANAGEMENT
ENVIRONMENTAL PERMITS
HIGHWAY DESIGN
LAND DEVELOPMENT PLANNING & DESIGN
LAND USE STUDIES
MUNICIPAL WORKS
PARKS & RECREATION FACILITIES

SEWAGE COLLECTION, TREATMENT & DISPOSAL
SOLID WASTE LANDFILLS
STORM DRAINAGE STUDIES & DESIGN
SUBDIVISIONS
SURVEYING: LAND SURVEYS
CONSTRUCTION SURVEYS
TOPOGRAPHIC MAPS
WATER SUPPLY, TREATMENT & DISTRIBUTION

August 7, 2020

Michael & Patricia McInerney
12 Rimrock Rd.
Russellville, Arkansas 72802

RE: Proposed FERC Permit Construction Plan
Lake Martin Land Company
Lake Martin, Dadeville, Alabama
Tallapoosa County

Dear Mr. & Mrs. McInerney:

You are receiving this letter and attached Non-Residential FERC permit Construction Plan because you are an adjacent landowner to the above referenced project. On behalf of the developer, Lake Martin Land Company, we request your comments regarding the construction of five (5) proposed boat docks and one (1) boardwalk on Lake Martin, in Dadeville, Alabama. The site is located in Tallapoosa County, Alabama.

This request is part of the Alabama Power Company's review process. Please review the enclosed plan and return written comments to this office within Thirty (30) days. Feel free to contact this office with any questions.

Yours very truly,

Steven E. Speaks, P.E., P.L.S.

SES/cbb
Enclosures
Cc: file

Document Accessi

SENDER: COMPLETE THIS SECTION

- Complete items 1, 2, and 3.
- Print your name and address on the reverse so that we can return the card to you.
- Attach this card to the back of the mailpiece, or on the front if space permits.

1. Article Addressed to:

Michael & Patricia McInerney
12 Rimrock Road
Russellville, Arkansas 72802

9590 9402 4414 8248 9947 59

2. Article Number *(Transfer from service label)*
7007 2560 0003 0312 3416

COMPLETE THIS SECTION ON DELIVERY

A. Signature
X T Norris
☐ Agent
☐ Addressee

B. Received by *(Printed Name)* T Norris
C. Date of Delivery 8-3

D. Is delivery address different from item 1? ☐ Yes
If YES, enter delivery address below: ☐ No

3. Service Type
☐ Adult Signature
☐ Adult Signature Restricted Delivery
☑ Certified Mail®
☐ Certified Mail Restricted Delivery
☐ Collect on Delivery
☐ Collect on Delivery Restricted Delivery
☐ Insured Mail
☐ Insured Mail Restricted Delivery (over $500)
☐ Priority Mail Express®
☐ Registered Mail™
☐ Registered Mail Restricted Delivery
☐ Return Receipt for Merchandise
☐ Signature Confirmation™
☐ Signature Confirmation Restricted Delivery

PS Form 3811, July 2015 PSN 7530-02-000-9053 Domestic Return Receipt

7007 2560 0003 0312 3416

U.S. Postal Service™
CERTIFIED MAIL™ RECEIPT
(Domestic Mail Only; No Insurance Coverage Provided)

For delivery information visit our website at www.usps.com®

OFFICIAL USE

Postage	$ 1.40
Certified Fee	3.55
Return Receipt Fee (Endorsement Required)	2.85
Restricted Delivery Fee (Endorsement Required)	
Total Postage & Fees	$ 7.80

DOWNTOWN STATION
AUG 17 2020
36104-999
Postmark Here

Sent To *Michael & Patricia McInerney*
Street, Apt. or PO Box *12 Rimrock Road*
City, State, *Russellville, Arkansas 72802*

PS Form 3800, August 2006 See Reverse for Instructions

Michael McInerney
12 Rimrock Rd
Russellville, AR 72802

Sept 1, 2020

Larry E. Sparks & Associates, Inc.
Consulting Engineers & Land Surveyors
535 Herron Street
Montgomery, AL 36104

Attn: Steven E. Sparks

In reference to your letter to me of August 7, 2020 with proposed FERC Permit Construction plan attached, I have no comment related to the proposed boardwalk construction and 5 boat docks as shown on your FERC Permit Construction Plan dated 8/3/2020.

I would like to comment that Lot 23, Turkey Roost Subdivision is not shown on the drawing for reference boundaries. See markup attached.

I also have the following question. Do you know what the intended end use of Lake Martin Land Company lots 22 through 33 will be?

Yours very truly

Michael J. McInerney

Document Accession #: 20201229-5069 Filed Date: 12/29/2020

TOTAL VESSEL PARKING AREAS PROPOSED DOCKS:

MAXIMUM 32 VESSELS

PROPOSED DOCKS TO SERVE ADJACENT 33 LOT DEVELO

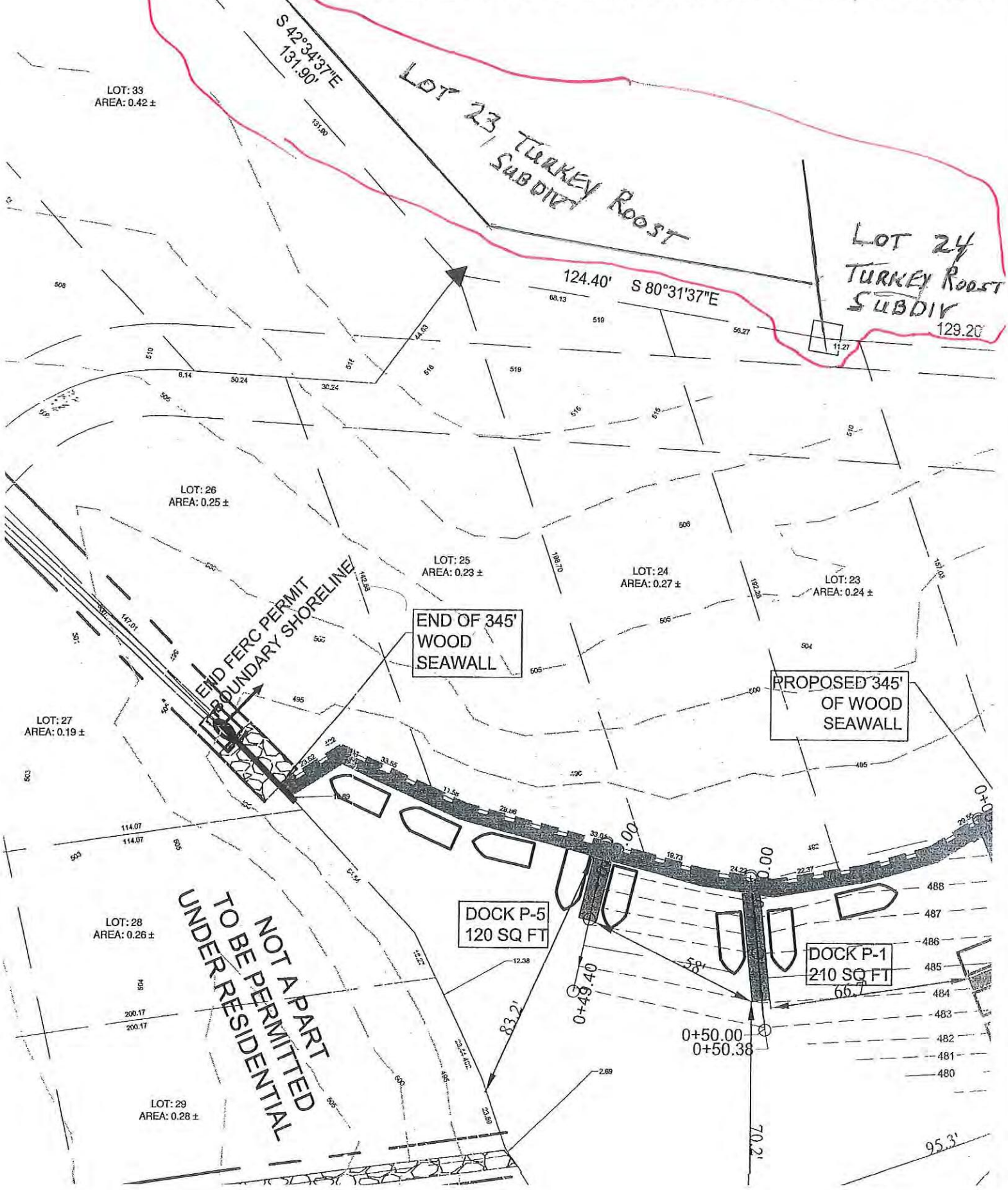

Document Accession #: 20201229-5039 Filed Date: 12/29/2020

LARRY E. SPEAKS & ASSOCIATES, INC.
CONSULTING ENGINEERS & LAND SURVEYORS

535 Herron Street
Montgomery, Alabama 36104
Telephone: 334.262.1091
Facsimile: 334.262.2211

AIRPORTS
BRIDGE DESIGN
CONSTRUCTION MANAGEMENT
ENVIRONMENTAL PERMITS
HIGHWAY DESIGN
LAND DEVELOPMENT PLANNING & DESIGN
LAND USE STUDIES
MUNICIPAL WORKS
PARKS & RECREATION FACILITIES

SEWAGE COLLECTION, TREATMENT & DISPOSAL
SOLID WASTE LANDFILLS
STORM DRAINAGE STUDIES & DESIGN
SUBDIVISIONS
SURVEYING: LAND SURVEYS
CONSTRUCTION SURVEYS
TOPOGRAPHIC MAPS
WATER SUPPLY, TREATMENT & DISTRIBUTION

October 1, 2020

Michael McInerney
12 Rimrock Road
Russellville, AR 72802

RE: Proposed FERC Permit Construction Plan
Lake Martin Land Company
Lake Martin, Dadeville, Alabama
Tallapoosa County

Dear Mr. McInerney:

We are in receipt of your letter dated September 1, 2020 concerning the above referenced project on Lake Martin. We appreciate your feedback and for taking the time to review the proposed Construction Plan. This project has been submitted to APCO and numerous federal and state agencies for review and comment. We have reviewed the items in the letter with the developer and offer the following responses:

Lot 23 Turkey Roost Subdivision was not shown on the proposed construction plan along with several other interior adjoining properties. All property adjoiners and other interior property owners in the vicinity were notified of the proposed construction as you were by certified mail. The specific lots, owners and other property owners was determined by Alabama Power Company.

The intended use for Lake Martin Land Company Lots 22-33 will be for single family residential homes.

We thank you for your questions and comments. The developer plans to work with all the neighbors in this area. The developer will be glad to answer any additional questions.

Yours very truly,

Steven E. Speaks, PE, PLS, FACEC

cc. Mr. J.R Adams, LMLC

Document Accession #: 20201229-5039 Filed Date: 12/29/2020

LARRY E. SPEAKS & ASSOCIATES, INC.
CONSULTING ENGINEERS & LAND SURVEYORS
535 Herron Street
Montgomery, Alabama 36104
Telephone: 334.262.1091
Facsimile: 334.262.2211

AIRPORTS
BRIDGE DESIGN
CONSTRUCTION MANAGEMENT
ENVIRONMENTAL PERMITS
HIGHWAY DESIGN
LAND DEVELOPMENT PLANNING & DESIGN
LAND USE STUDIES
MUNICIPAL WORKS
PARKS & RECREATION FACILITIES

SEWAGE COLLECTION, TREATMENT & DISPOSAL
SOLID WASTE LANDFILLS
STORM DRAINAGE STUDIES & DESIGN
SUBDIVISIONS
SURVEYING: LAND SURVEYS
CONSTRUCTION SURVEYS
TOPOGRAPHIC MAPS
WATER SUPPLY, TREATMENT & DISTRIBUTION

August 7, 2020

Fred R. Weaver
23 South Cardinal Heights
Dadeville, AL 36853

RE: Proposed FERC Permit Construction Plan
Lake Martin Land Company
Lake Martin, Dadeville, Alabama
Tallapoosa County

Dear Mr. Weaver:

You are receiving this letter and attached Non-Residential FERC permit Construction Plan because you are an adjacent landowner to the above referenced project. On behalf of the developer, Lake Martin Land Company, we request your comments regarding the construction of five (5) proposed boat docks and one (1) boardwalk on Lake Martin, in Dadeville, Alabama. The site is located in Tallapoosa County, Alabama.

This request is part of the Alabama Power Company's review process. Please review the enclosed plan and return written comments to this office within Thirty (30) days. Feel free to contact this office with any questions.

Yours very truly,

Steven E. Speaks, P.E., P.L.S.

SES/cbb
Enclosures
Cc: file

Document Ac

SENDER: COMPLETE THIS SECTION

- Complete items 1, 2, and 3.
- Print your name and address on the reverse so that we can return the card to you.
- Attach this card to the back of the mailpiece, or on the front if space permits.

1. Article Addressed to:

Fred R. Weaver
23 South Cardinal Heights
Dadeville, AL 36853

9590 9402 4414 8248 9945 37

2. Article Number *(Transfer from service label)*
7007 2560 0003 0312 3300

COMPLETE THIS SECTION ON DELIVERY

A. Signature
X [signature] ☐ Agent ☐ Addressee

B. Received by *(Printed Name)* | C. Date of Delivery
Fred Weaver 8/3/20

D. Is delivery address different from item 1? ☐ Yes
If YES, enter delivery address below: ☐ No

3. Service Type
- ☐ Adult Signature
- ☐ Adult Signature Restricted Delivery
- ☑ Certified Mail®
- ☐ Certified Mail Restricted Delivery
- ☐ Collect on Delivery
- ☐ Collect on Delivery Restricted Delivery
- ☐ Insured Mail
- ☐ Insured Mail Restricted Delivery (over $500)
- ☐ Priority Mail Express®
- ☐ Registered Mail™
- ☐ Registered Mail Restricted Delivery
- ☐ Return Receipt for Merchandise
- ☐ Signature Confirmation™
- ☐ Signature Confirmation Restricted Delivery

PS Form 3811, July 2015 PSN 7530-02-000-9053 — Domestic Return Receipt

7007 2560 0003 0312 3300

U.S. Postal Service™
CERTIFIED MAIL™ RECEIPT
(Domestic Mail Only; No Insurance Coverage Provided)

For delivery information visit our website at www.usps.com®

OFFICIAL USE

Postage	$ 1.40
Certified Fee	3.55
Return Receipt Fee (Endorsement Required)	2.85
Restricted Delivery Fee (Endorsement Required)	
Total Postage & Fees	$ 7.80

DOWNTOWN STATION
Postmark Here
AUG 11 2020
36104-9998

Sent To *Fred R. Weaver*
Street, Apt. or PO Box *23 South Cardinal Heights*
City, State, *Dadeville, AL 36853*

PS Form 3800, August 2006 — See Reverse for Instructions

Law Office of
Mitchell E. Gavin
1258 Lee Street
Post Office Box 248
Alexander City, Alabama 35011-0248

Telephone 256-329-2211
Facsimile 256-329-2214

E-Mail megavin@bellsouth.net

August 28, 2020

Mr. Steven E. Speaks
Larry Speaks & Associates, Inc.
535 Herron Street
Montgomery, Alabama 36104

Re: Proposed FERC Permit Construction Plan
Lake Martin Land Company
Lake Martin, Dadeville, Alabama
Tallapoosa County

Dear Mr. Speaks:

I represent Fred R. Weaver, who has given me your letter to him dated August 7, 2020, for reply. Mr. Weaver objects to the grant of the FERC Permit on the following grounds:

1. It appears that the lot upon which the proposed dock P-2 will be attached has less than 100 linear feet of shoreline;
2. It appears that the proposed dock P-2 is not set back a minimum of 15 feet from the extension of the property line of the lot to which it will be attached;
3. This is a narrow slough, and it appears that the proposed dock P-2 will extend more than 1/3 way across the slough not considering the additional width of vessels which may be moored to the proposed dock;
4. The addition of the proposed docks and boardwalks would cause excessive boat traffic and create unsafe conditions;
5. Because of the shallow water level at the end of the slough where many of the proposed docks would be located, the proposed docks and boardwalks would create unsafe boating conditions;
6. Due to the size of most pontoons boats in use on Lake Martin, the number and close proximity of docks would make it difficult to maneuver in the slough which would create unsafe boating conditions;
7. The proposed increase in the number of docks and increased boat traffic would affect the quality of the water and cause an unsafe condition for swimmers.

If you have any questions, or would like to discuss this matter further, please do not hesitate to contact me.

Sincerely,

Mitchell E. Gavin

Mitchell E. Gavin

/mg

cc: Ms. Angie Noel
Alabama Power Company Shoreline Management
P.O. Box 2641
Birmingham, Alabama 35203-2206

Mr. Rhett Hanks
Corporate Real Estate-Shoreline Management
1296 South Tallassee Street
Dadeville, Alabama 36853

Mr. Kevin Eason
StillWaters Residental Association
1816 StillWaters Drive
Dadeville, Alabama 36853

Document Accession #: 20201229-5039 Filed Date: 12/29/2020

LARRY E. SPEAKS & ASSOCIATES, INC.
CONSULTING ENGINEERS & LAND SURVEYORS
535 Herron Street
Montgomery, Alabama 36104
Telephone: 334.262.1091
Facsimile: 334.262.2211

AIRPORTS
BRIDGE DESIGN
CONSTRUCTION MANAGEMENT
ENVIRONMENTAL PERMITS
HIGHWAY DESIGN
LAND DEVELOPMENT PLANNING & DESIGN
LAND USE STUDIES
MUNICIPAL WORKS
PARKS & RECREATION FACILITIES

SEWAGE COLLECTION, TREATMENT & DISPOSAL
SOLID WASTE LANDFILLS
STORM DRAINAGE STUDIES & DESIGN
SUBDIVISIONS
SURVEYING: LAND SURVEYS
CONSTRUCTION SURVEYS
TOPOGRAPHIC MAPS
WATER SUPPLY, TREATMENT & DISTRIBUTION

October 1, 2020

Mitchell E. Gavin
PO Box 248
Alexander City, Alabama 35011-0248

RE: Proposed FERC Permit Construction Plan
Lake Martin Land Company
Lake Martin, Dadeville, Alabama
Tallapoosa County

Dear Mr. Gavin:

We are in receipt of your letter dated August 28, 2020 concerning the above referenced project on Lake Martin. We appreciate your feedback and for taking the time to review the proposed Construction Plan. This project has been submitted to APCO and numerous federal and state agencies for review and comment. We have reviewed the items in the letter with the developer and offer the following responses in order of your comments:

Q 1-3: The requirements you are stating are for Alabama Power Residential Shoreline Permitting. For this project Alabama Power Company's guidelines require the use of Non-residential permitting when the specific shoreline areas, boardwalks and docks shown in the construction plan are to be considered common areas of the adjacent development. The proposed dock plan is configured to meet the APCO and FERC guidelines. The proposed dock footprints meet set back and length restrictions as well as total square footage restrictions. This plan meets the regulated restrictions.

Q 4-7 The developer does not want to create an unsafe boating condition. At full pool, the proposed docks & boardwalks should allow for boat parking. Individual boat owners are responsible for their safety.

We thank you for your questions and comments. The developer plans to work with all the neighbors in this area. The developer will be glad to answer any additional questions.

Yours very truly,

Steven E. Speaks, PE, PLS, FACEC
cc. Mr. J.R Adams, LMLC

Document Accession #: 20201229-5039 Filed Date: 12/29/2020

LARRY E. SPEAKS & ASSOCIATES, INC.
CONSULTING ENGINEERS & LAND SURVEYORS
535 Herron Street
Montgomery, Alabama 36104
Telephone: 334.262.1091
Facsimile: 334.262.2211

AIRPORTS
BRIDGE DESIGN
CONSTRUCTION MANAGEMENT
ENVIRONMENTAL PERMITS
HIGHWAY DESIGN
LAND DEVELOPMENT PLANNING & DESIGN
LAND USE STUDIES
MUNICIPAL WORKS
PARKS & RECREATION FACILITIES

SEWAGE COLLECTION, TREATMENT & DISPOSAL
SOLID WASTE LANDFILLS
STORM DRAINAGE STUDIES & DESIGN
SUBDIVISIONS
SURVEYING: LAND SURVEYS
CONSTRUCTION SURVEYS
TOPOGRAPHIC MAPS
WATER SUPPLY, TREATMENT & DISTRIBUTION

August 7, 2020

Mitzy Hidding
7985 Saddle Ridge Dr.
Sandy Springs, GA 30350

RE: Proposed FERC Permit Construction Plan
Lake Martin Land Company
Lake Martin, Dadeville, Alabama
Tallapoosa County

Dear Ms. Hidding:

You are receiving this letter and attached Non-Residential FERC permit Construction Plan because you are an adjacent landowner to the above referenced project. On behalf of the developer, Lake Martin Land Company, we request your comments regarding the construction of five (5) proposed boat docks and one (1) boardwalk on Lake Martin, in Dadeville, Alabama. The site is located in Tallapoosa County, Alabama.

This request is part of the Alabama Power Company's review process. Please review the enclosed plan and return written comments to this office within Thirty (30) days. Feel free to contact this office with any questions.

Yours very truly,

Steven E. Speaks, P.E., P.L.S.

SES/cbb
Enclosures
Cc: file

Document Acc

SENDER: COMPLETE THIS SECTION

- Complete items 1, 2, and 3.
- Print your name and address on the reverse so that we can return the card to you.
- Attach this card to the back of the mailpiece, or on the front if space permits.

1. Article Addressed to:

Mitzy & Richard Hidding
109 South Cardinal Heights
Dadeville, AL 36853

9590 9402 4414 8248 9946 50

2. Article Number (Transfer from service label)
7007 2560 0003 0312 3591

COMPLETE THIS SECTION ON DELIVERY

A. Signature
X Marty Hid ☐ Agent ☐ Addressee

B. Received by (Printed Name) M. Hidding C. Date of Delivery 8-29

D. Is delivery address different from item 1? ☐ Yes
If YES, enter delivery address below: ☐ No

3. Service Type
☐ Adult Signature
☐ Adult Signature Restricted Delivery
☑ Certified Mail®
☐ Certified Mail Restricted Delivery
☐ Collect on Delivery
☐ Collect on Delivery Restricted Delivery
☐ Insured Mail
☐ Insured Mail Restricted Delivery (over $500)
☐ Priority Mail Express®
☐ Registered Mail™
☐ Registered Mail Restricted Delivery
☐ Return Receipt for Merchandise
☐ Signature Confirmation™
☐ Signature Confirmation Restricted Delivery

PS Form 3811, July 2015 PSN 7530-02-000-9053 Domestic Return Receipt

7007 2560 0003 0312 3591

U.S. Postal Service™
CERTIFIED MAIL™ RECEIPT
(Domestic Mail Only; No Insurance Coverage Provided)

For delivery information visit our website at www.usps.com®

OFFICIAL USE

Postage	$ 1.40
Certified Fee	3.55
Return Receipt Fee (Endorsement Required)	2.85
Restricted Delivery Fee (Endorsement Required)	
Total Postage & Fees	$ 7.80

DOWNTOWN STATION MONTGOMERY, ALABAMA 36104-USPS AUG 19 2020 Postmark Here

Sent To Mitzy & Richard Hidding
Street, Apt or PO Box 109 South Cardinal Heights
City, State Dadeville, AL 36853

PS Form 3800, August 2006 ...tions

Document Access

SENDER: COMPLETE THIS SECTION

- Complete items 1, 2, and 3.
- Print your name and address on the reverse so that we can return the card to you.
- Attach this card to the back of the mailpiece, or on the front if space permits.

1. Article Addressed to:

Mitzy Hidding
7985 Saddle Ridge Drive
Sandy Springs, GA 30350

9590 9402 4414 8248 9945 51

2. Article Number *(Transfer from service label)*
7007 2560 0003 0312 3287

COMPLETE THIS SECTION ON DELIVERY

A. Signature
X 502485
☐ Agent
☐ Addressee

B. Received by *(Printed Name)* C19
C. Date of Delivery 8/17

D. Is delivery address different from item 1? ☐ Yes
If YES, enter delivery address below: ☐ No

3. Service Type
☐ Adult Signature
☐ Adult Signature Restricted Delivery
☑ Certified Mail®
☐ Certified Mail Restricted Delivery
☐ Collect on Delivery
☐ Collect on Delivery Restricted Delivery
☐ Insured Mail
☐ Insured Mail Restricted Delivery (over $500)
☐ Priority Mail Express®
☐ Registered Mail™
☐ Registered Mail Restricted Delivery
☐ Return Receipt for Merchandise
☐ Signature Confirmation™
☐ Signature Confirmation Restricted Delivery

PS Form 3811, July 2015 PSN 7530-02-000-9053 Domestic Return Receipt

7007 2560 0003 0312 3287

U.S. Postal Service™
CERTIFIED MAIL™ RECEIPT
(Domestic Mail Only; No Insurance Coverage Provided)

For delivery information visit our website at www.usps.com®

OFFICIAL USE

Postage	$ 1.40
Certified Fee	3.55
Return Receipt Fee (Endorsement Required)	2.85
Restricted Delivery Fee (Endorsement Required)	
Total Postage & Fees	$ 7.80

DOWNTOWN STATION
Postmark Here
AUG 17 2020
36104-9998

Sent To *Mitzy Hidding*
Street, Apt. N *7985 Saddle Ridge Drive*
or PO Box N
City, State, Z *Sandy Springs, GA 30350*

PS Form 3800, August 2006 See Reverse for Instructions

Document Accession #: 20201229-5039 Filed Date: 12/29/2020

Mitzy & Rick Hidding
109 South Cardinal Heights
On Beautiful Lake Martin
Dadeville, AL 36853

August 28, 2020

Steven E. Speaks
Larry E. Speaks & Associates, Inc.
535 Herron Street
Montgomery, AL 36104

Dear Mr. Speaks:

We are writing as waterfront property owners, to express our deep concerns with the non-residential FERC construction plan for Lake Martin Land Company's development called, The Landings inside StillWaters on the old golf course which will be asking for multi-use docks throughout our slough for **non-waterfront** residents.

It's important to note, there are at least 6 more individual/residential docks already permitted and being built for **waterfront** residential use NOT show on your map and thus it's critical for FERC, AL Power, and ALEA to understand, there is **NO MAP or PLAN showing the OVERALL DOCKS and IMPACT to the slough and Lake Martin.**

We, as the adjoining slough property owners, have had no input on this **33-lot development** with homes being built on less than ¼ acre lots. StillWaters shared the existence of a pending development coming with one day's notice on the Friday before Labor Day weekend 2019. On Saturday, the bulldozers showed up! At this meeting, the developer, JR Allen, assured the attendees the walkway in the back of the slough would be used as a convenience for boaters to be able to tie up to *temporarily* while they ran into their home or watched a ballgame perhaps, but no overnight stays. They never mentioned they planned to provide multiple boat slips for all the non-residential sites!

The proposed non-residential FERC plan calls for community docks and communal walkways with **32 watercraft slips** for the non-waterfront residents inside The Landing to utilize. When the additional **6 waterfront residential docks** that all together can hold 25+ watercrafts are added in, the developer **is actually asking FERC for almost SIXTY watercraft slips for 33 lots**.

The big picture plan of this development is what we've reviewed and we **strongly object to it on both size and density.** The developer's proposal for more slips than home sites makes this a private marina. To allow almost **60 watercraft slips** would set **an extremely bad precedent** for StillWaters and Lake Martin. Lake Martin is a *Treasure of Alabama* and should not become the next Lake Lanier from Georgia, a dangerous and overcrowded lake! No residential development should be allowed to build a mini-Marina in a residential slough for non-waterfront homes. This is not a condo complex. **We request that the developer drastically scales back their plans to ONLY have a boardwalk. No multi-slip docks should be built in the back of the slough for non-waterfront homeowners.**

Warm regards,

Mitzy & Rick

Mitzy and Rick Hidding

Pc:
Rhett Hanks, Lake Martin Shoreline Manager, Alabama Power, 1296 Tallassee Street, Dadeville, AL 36853
Billy Edge, Land Supervisor, P.O. Box 2641, Birmingham, AL 35203-2206
Angie Noel, Director of Shoreline, Leasing & Sales, P.O. Box 2641, Birmingham, AL 35203-2206
Gordon Martin, Senior VP of Corporate & Administrative Services. P.O. Box 2641, Birmingham, AL 35203-2206
Lt. Mark Fuller, Central District Marine Police Commander, 126 Marina Road, Alexander City, AL 35010
Mark Crosswhite, President & CEO, Alabama Power Company, P.O. Box 2641, Birmingham, AL 35203-2206
Thomas A. Fanning, President & CEO, The Southern Company, 30 Ivan Allen Jr. Blvd., NW, Atlanta, GA 30308

Document Accession #: 20201229-5039 Filed Date: 12/29/2020

LARRY E. SPEAKS & ASSOCIATES, INC.
CONSULTING ENGINEERS & LAND SURVEYORS
535 Herron Street
Montgomery, Alabama 36104
Telephone: 334.262.1091
Facsimile: 334.262.2211

AIRPORTS
BRIDGE DESIGN
CONSTRUCTION MANAGEMENT
ENVIRONMENTAL PERMITS
HIGHWAY DESIGN
LAND DEVELOPMENT PLANNING & DESIGN
LAND USE STUDIES
MUNICIPAL WORKS
PARKS & RECREATION FACILITIES

SEWAGE COLLECTION, TREATMENT & DISPOSAL
SOLID WASTE LANDFILLS
STORM DRAINAGE STUDIES & DESIGN
SUBDIVISIONS
SURVEYING: LAND SURVEYS
CONSTRUCTION SURVEYS
TOPOGRAPHIC MAPS
WATER SUPPLY, TREATMENT & DISTRIBUTION

October 1, 2020

Mitzy & Rick Hidding
109 South Cardinal Heights
Dadeville, AL 36853

RE: Proposed FERC Permit Construction Plan
Lake Martin Land Company
Lake Martin, Dadeville, Alabama
Tallapoosa County

Dear Mrs. Hidding:

We are in receipt of your letter dated August 20, 2020 concerning the above referenced project on Lake Martin. We appreciate your feedback and for taking the time to review the proposed Construction Plan. This project has been submitted to APCO and numerous federal and state agencies for review and comment. We have reviewed the items in the letter with the developer and offer the following responses:

The proposed dock plan is configured to meet the APCO and FERC guidelines. The proposed dock footprints meet set back and length restrictions as well as total square footage restrictions. This plan meets the regulated restrictions.

The proposed docks will be for use by specific property owners in this plat and their guests, it will not be available for public use. The proposed plan is for a maximum of 32 vessels and to provide water access to the lots above the seawall and interior lots in the plat.

ALEA Marine Patrol Enforcement is one of the agencies the Developer notified in this process. The developer reached out to ALEA inquiring about the possibility of a no wake buoy for the slough. ALEA denied the request as the project does not meet the guidelines/requirements for a no wake buoy.

We thank you for your questions and comments. The developer plans to work with all the neighbors in this area. The developer will be glad to answer any additional questions.

Yours very truly,

Steven E. Speaks, PE, PLS, FACEC

cc. Mr. J.R Adams

Document Accession #: 20201229-5039 Filed Date: 12/29/2020

LARRY E. SPEAKS & ASSOCIATES, INC.
CONSULTING ENGINEERS & LAND SURVEYORS
535 Herron Street
Montgomery, Alabama 36104
Telephone: 334.262.1091
Facsimile: 334.262.2211

AIRPORTS
BRIDGE DESIGN
CONSTRUCTION MANAGEMENT
ENVIRONMENTAL PERMITS
HIGHWAY DESIGN
LAND DEVELOPMENT PLANNING & DESIGN
LAND USE STUDIES
MUNICIPAL WORKS
PARKS & RECREATION FACILITIES

SEWAGE COLLECTION, TREATMENT & DISPOSAL
SOLID WASTE LANDFILLS
STORM DRAINAGE STUDIES & DESIGN
SUBDIVISIONS
SURVEYING: LAND SURVEYS
CONSTRUCTION SURVEYS
TOPOGRAPHIC MAPS
WATER SUPPLY, TREATMENT & DISTRIBUTION

August 7, 2020

Trustee of Jones Trust Agreement
75 Pebble Beach Lane
Dadeville, AL 36853

RE: Proposed FERC Permit Construction Plan
Lake Martin Land Company
Lake Martin, Dadeville, Alabama
Tallapoosa County

To Whom it May Concern:

You are receiving this letter and attached Non-Residential FERC permit Construction Plan because you are an adjacent landowner to the above referenced project. On behalf of the developer, Lake Martin Land Company, we request your comments regarding the construction of five (5) proposed boat docks and one (1) boardwalk on Lake Martin, in Dadeville, Alabama. The site is located in Tallapoosa County, Alabama.

This request is part of the Alabama Power Company's review process. Please review the enclosed plan and return written comments to this office within Thirty (30) days. Feel free to contact this office with any questions.

Yours very truly,

Steven E. Speaks, P.E., P.L.S.

SES/cbb
Enclosures
Cc: file

Document Acc

SENDER: COMPLETE THIS SECTION

- Complete items 1, 2, and 3.
- Print your name and address on the reverse so that we can return the card to you.
- Attach this card to the back of the mailpiece, or on the front if space permits.

1. Article Addressed to:

Trustee of Jones Trust Agreement
75 Pebble Beach Lane
Dadeville, AL 36853

9590 9402 4414 8248 9947 11

2. Article Number *(Transfer from service label)*
7007 2560 0003 0312 3454

COMPLETE THIS SECTION ON DELIVERY

A. Signature
X Rob Jones ☐ Agent ☐ Addressee

B. Received by *(Printed Name)* Renee
C. Date of Delivery 8-13-23

D. Is delivery address different from item 1? ☐ Yes
If YES, enter delivery address below: ☐ No

3. Service Type
☐ Adult Signature
☐ Adult Signature Restricted Delivery
☑ Certified Mail®
☐ Certified Mail Restricted Delivery
☐ Collect on Delivery
☐ Collect on Delivery Restricted Delivery
☐ Insured Mail
☐ Insured Mail Restricted Delivery (over $500)
☐ Priority Mail Express®
☐ Registered Mail™
☐ Registered Mail Restricted Delivery
☐ Return Receipt for Merchandise
☐ Signature Confirmation™
☐ Signature Confirmation Restricted Delivery

PS Form 3811, July 2015 PSN 7530-02-000-9053 Domestic Return Receipt

7007 2560 0003 0312 3454

U.S. Postal Service™
CERTIFIED MAIL™ RECEIPT
(Domestic Mail Only; No Insurance Coverage Provided)

For delivery information visit our website at www.usps.com®

OFFICIAL USE

Postage	$ 1.40
Certified Fee	3.55
Return Receipt Fee (Endorsement Required)	2.85
Restricted Delivery Fee (Endorsement Required)	
Total Postage & Fees	$ 7.80

Postmark Here
DOWNTOWN STA
AUG 1
36104-99

Sent To *Trustee of Jones Trust Agreement*
Street, Apt. No or PO Box No. *75 Pebble Beach Lane*
City, State, ZIP *Dadeville, AL 36853*

PS Form 3800, August 2006 See Reverse for Instructions

Roger E Jones
Trustee of Jones Trust Agreement
75 Pebble Beach Lane
Dadeville, AL 36853

August 26, 2020

Larry E. Speaks & Associates, INC
Consulting Engineers & Land Surveyors
535 Herron Street
Montgomery, AL 36104

RE: Proposed FERC Permit Construction Plan
Lake Martin Land Company, dated August 7, 2020

Dear Mr. Speaks,

Thank you for the opportunity to review the developers plans for the cove area at the Landing. Hopefully, Alabama Power Company and the developer will ensure all the concerns are addressed thoroughly before any projects are given approval.

What does non-residential boat docks mean; does this mean that anyone can use/rent/own a boat dock at the Landing and do not have to live there? Or is it being used for company owned docks vs an individual own boat dock? The term non-residential boat dock could not be found in the Alabama Power Shoreline guidelines. We are assuming that the term non-residential boat docks are used for docks built by a developer. If not please advise immediately.

Reviewing the map of the proposed non-residential boat docks and boardwalk with tie up for boats some concerns are immediately highlighted. The biggest concern is the number of boats as shown that were tied up at the boardwalk or in the docks during the summer. It would overwhelm the navigable routes to get into and out of the cove area which could result in accidents due to the congestion of the current boats and the additional ones from Lake Martin Land homeowners. We strongly oppose the number of boats along the boardwalk and boat docks.

With the additional boat docking and traffic in a small area, it would appear night lighting will be required for security, which would be an issue for all the current homeowners. Families and younger children like to swim/float in the cove their house is on, with that many slips and boats it would be very hazardous situation. The boat slips will dictate the size of the boats that could be used, if an owner has a bigger boat than the slip there will be no room to dock it safely. In addition, more boats will result in more noise from their large boat music speakers that are on most boats currently.

Also, the current homeowners would be concerned with their lake view from their back porches that would negatively impact the scenic view. This will probably result negatively on their property value.

It appears the Lake Martin Land Company needs to reconsider the amount of boat slips and other support functions required then provide the current landowners an opportunity for a question and answer meeting before any approval. At previous meetings with the developer they outlined their vision and development of the Landing. It has been a little misleading with the current state. Initial briefings stated that the only boat docks would be for the 4-6 homes on the deeper water and a few tie ups for the other owners on the boardwalk. Also, all lots will be developed by them and none would be sold to individuals. The tree line along Pebble Beach Lane would remain to provide screening from the development, so far that has been done and is much appreciated by the current homeowners. Developer has briefed that the drainage issues with runoff would be addressed and fixed since more house yards along the area will be draining into the effective areas making the issue a larger problem.

Until all our concerns are addressed and shown that actual data from a marina engineering company we must, as we are sure majority of the current landowner, disagree with this planning proposal.

Sincerely

Roger E. Jones
Jones Trust Agreement
75 Pebble Beach Lane

(Email Concur)
Hub Maroney
59 Pebble Beach Lane

Terry Gantt
101 Pebble Beach Lane

BJ Shuler
121 Pebble Beach Lane

Document Accession #: 20201229-5039 Filed Date: 12/29/2020

LARRY E. SPEAKS & ASSOCIATES, INC.
CONSULTING ENGINEERS & LAND SURVEYORS
535 Herron Street
Montgomery, Alabama 36104
Telephone: 334.262.1091
Facsimile: 334.262.2211

AIRPORTS
BRIDGE DESIGN
CONSTRUCTION MANAGEMENT
ENVIRONMENTAL PERMITS
HIGHWAY DESIGN
LAND DEVELOPMENT PLANNING & DESIGN
LAND USE STUDIES
MUNICIPAL WORKS
PARKS & RECREATION FACILITIES

SEWAGE COLLECTION, TREATMENT & DISPOSAL
SOLID WASTE LANDFILLS
STORM DRAINAGE STUDIES & DESIGN
SUBDIVISIONS
SURVEYING: LAND SURVEYS
CONSTRUCTION SURVEYS
TOPOGRAPHIC MAPS
WATER SUPPLY, TREATMENT & DISTRIBUTION

October 1, 2020

Roger E. Jones
Trustee of Jones Trust Agreement
75 Pebble Beach Lane
Dadeville, AL 36853

RE: Proposed FERC Permit Construction Plan
Lake Martin Land Company
Lake Martin, Dadeville, Alabama
Tallapoosa County

Dear Mr. Jones:

We are in receipt of your letter dated August 26, 2020 concerning the above referenced project on Lake Martin. We appreciate your feedback and for taking the time to review the proposed Construction Plan. This project has been submitted to APCO and numerous federal and state agencies for review and comment. We have reviewed the items in the letter with the developer and offer the following responses:

For this project Alabama Power Company's guidelines require the use of Non-residential permitting when the specific shoreline areas, boardwalks and docks shown in the construction plan are to be considered common areas of the adjacent development. This will allow off water lots within the development access to the lake.

The proposed docks will be for use by specific property owners in this plat development and their guests, it will not be available for public use.

ALEA Marine Patrol Enforcement is one of the agencies the Developer notified in this process. The developer reached out to ALEA inquiring about the possibility of a no wake buoy for the slough. ALEA denied the request as the project does not meet the guidelines/requirements for a no wake buoy.

The proposed dock plan is configured to meet the APCO and FERC guidelines. The proposed dock footprints meet set back and length restrictions as well as total square footage restrictions. The other waterfront lots labeled (Not a Part) will be permitted locally by APCO and meet applicable permitting guidelines.

We thank you for your questions and comments. The developer plans to work with all the neighbors in the area. The developer will be glad to answer any additional questions.

Yours very truly,

Steven E. Speaks, PE, PLS, FACEC
cc. Mr. J.R Adams, LMLC

Document Accession #: 20201229-5039 Filed Date: 12/29/2020

LARRY E. SPEAKS & ASSOCIATES, INC.
CONSULTING ENGINEERS & LAND SURVEYORS
535 Herron Street
Montgomery, Alabama 36104
Telephone: 334.262.1091
Facsimile: 334.262.2211

AIRPORTS
BRIDGE DESIGN
CONSTRUCTION MANAGEMENT
ENVIRONMENTAL PERMITS
HIGHWAY DESIGN
LAND DEVELOPMENT PLANNING & DESIGN
LAND USE STUDIES
MUNICIPAL WORKS
PARKS & RECREATION FACILITIES

SEWAGE COLLECTION, TREATMENT & DISPOSAL
SOLID WASTE LANDFILLS
STORM DRAINAGE STUDIES & DESIGN
SUBDIVISIONS
SURVEYING: LAND SURVEYS
CONSTRUCTION SURVEYS
TOPOGRAPHIC MAPS
WATER SUPPLY, TREATMENT & DISTRIBUTION

August 7, 2020

William J. Vargo
7 South Cardinal Heights
Dadeville, AL 36853

RE: Proposed FERC Permit Construction Plan
Lake Martin Land Company
Lake Martin, Dadeville, Alabama
Tallapoosa County

Dear Mr. Vargo:

You are receiving this letter and attached Non-Residential FERC permit Construction Plan because you are an adjacent landowner to the above referenced project. On behalf of the developer, Lake Martin Land Company, we request your comments regarding the construction of five (5) proposed boat docks and one (1) boardwalk on Lake Martin, in Dadeville, Alabama. The site is located in Tallapoosa County, Alabama.

This request is part of the Alabama Power Company's review process. Please review the enclosed plan and return written comments to this office within Thirty (30) days. Feel free to contact this office with any questions.

Yours very truly,

Steven E. Speaks, P.E., P.L.S.

SES/cbb
Enclosures
Cc: file

Document Accessi

SENDER: COMPLETE THIS SECTION

- Complete items 1, 2, and 3.
- Print your name and address on the reverse so that we can return the card to you.
- Attach this card to the back of the mailpiece, or on the front if space permits.

1. Article Addressed to:

William J. Vargo
7 South Cardinal Heights
Dadeville, AL 36853

9590 9402 4414 8248 9945 20

2. Article Number *(Transfer from service label)*
7007 2560 0003 0312 3317

COMPLETE THIS SECTION ON DELIVERY

A. Signature
X ☐ Agent ☐ Addressee

B. Received by *(Printed Name)* C. Date of Delivery

D. Is delivery address different from item 1? ☐ Yes
If YES, enter delivery address below: ☐ No

3. Service Type
- ☐ Adult Signature
- ☐ Adult Signature Restricted Delivery
- ☑ Certified Mail®
- ☐ Certified Mail Restricted Delivery
- ☐ Collect on Delivery
- ☐ Collect on Delivery Restricted Delivery
- ☐ Insured Mail
- ☐ Insured Mail Restricted Delivery (over $500)
- ☐ Priority Mail Express®
- ☐ Registered Mail™
- ☐ Registered Mail Restricted Delivery
- ☐ Return Receipt for Merchandise
- ☐ Signature Confirmation™
- ☐ Signature Confirmation Restricted Delivery

PS Form 3811, July 2015 PSN 7530-02-000-9053 Domestic Return Receipt

7007 2560 0003 0312 3317

U.S. Postal Service™
CERTIFIED MAIL™ RECEIPT
(Domestic Mail Only; No Insurance Coverage Provided)

For delivery information visit our website at www.usps.com®

OFFICIAL USE

Postage	$ 1.40
Certified Fee	3.55
Return Receipt Fee (Endorsement Required)	2.85
Restricted Delivery Fee (Endorsement Required)	
Total Postage & Fees	$ 7.80

DOWNTOWN STATION
AUG 17 2020
Postmark Here
36104-9998

Sent To *William J. Vargo*
Street, Apt. No., or PO Box No. *7 South Cardinal Heights*
City, State, ZIP+4® *Dadeville, AL 36853*

PS Form 3800, August 2006 See Reverse for Instructions

August 25, 2020

Larry E. Speaks & Associates
535 Herron Street
Montgomery, Alabama 36104

Re: Proposed FERC Permit Construction Plan
Lake Martin Land Company
Lake Martin, Dadeville, Alabama
Tallapoosa County

Dear Mr. Speaks,

Thank you for requesting comments on the proposed FERC Permit Construction Plan on behalf of Lake Martin Land Company (LMLC). It is somewhat of a surprise since adjacent property owners were never consulted prior to the beginning of the project in September, 2019. We appreciate the opportunity to express our concerns.

As we're sure you are aware, there are already four docks built within the project area, and since adjacent property owners have not been part of the process, it is impossible for us to know how many other docks have already been approved. Having said that, we don't know how LMLC or Alabama Power Company (APC) can make informed decisions when the entire project area has not been considered at one time. Specifically the property to the left of the end of the proposed sea wall, lots 28, 29, and 30 have never been addressed, which raises the question of will there be a future request for even more boardwalk space and docks?

Adjacent property owners were originally told this development would be 33 homes, with waterfront homes having private docks and off-water homes having a community dock. Marketing materials shared with the general public also indicated the same. Pictures depicting the development, never showed a community dock within the confines of the small cove. A person of average intelligence would probably conclude that a community dock with multiple slips would be placed in open water so as not to create a health and safety risk for all involved. However, now, after constructing four docks, in an area of open water, LMLC is requesting five additional docks, including a community dock for twelve boats, allowing dockage for a total of 32 more boats in the small cove. Considering the existing docks of adjacent land owners, and the four already constructed, LMLC is trying to create an area for approximately 50 boats in the small cove. With an average boat size of about 22 feet on Lake Martin, the cove is much too small to house that number of boats and provide a safe atmosphere for boaters and swimmers. Further, the existence of a "marina-like" atmosphere in such a small area would negatively impact existing property values in the cove.

Another major issue that has not been addressed by LMLC is the environmental impact of this entire project on Lake Martin. We are convinced that the continual degradation of the shoreline will create long-term issues for local wildlife, who will no longer have easy water access. As

adjacent property owners, we have already witnessed the elimination of almost all trees in the project area, which has created much more water runoff during simple rain showers, not to mention severe water runoff during heavy storms. Water quality has to be negatively affected due to the runoff, which creates an unhealthy environment for swimmers, fish, and wildlife. Also, the shallow water around almost ⅓ of the cove's shoreline, does not lend itself to "boardwalk cleated" docks when the lake is not at full pool. The request of LMLC would create major safety issues without dredging. If dredged, it would create an even bigger issue of ecological impact in the cove.

Finally, as adjacent property owners, we are not opposed to progress, and understand that LMLC is in the business of building homes. However, we would hope that APC would not continue to allow LMLC to strip the cove of its natural beauty and appeal to those of us who have long made our homes here. In summary, we believe, the health, safety, economic and environmental impact of the request would be detrimental to Lake Martin. We would ask that the proposed permit be denied in its current form. We would further ask that Alabama Power Company and/or Lake Martin Land Company notify adjacent property owners of the final decision regarding the matter.

Respectfully submitted,

William and Donna Vargo

PS
Our neighbor, Frances Poeppelmeier, who received the same request for comment, asked that we include her in our response. She is unable to write a separate letter but concurs with the issues we have raised for your consideration. Her signature is presented below.

Frances Poeppelmeier

cc:
Kevin Eason, General Manager SWRA
1816 StillWaters Dr.
Dadeville, Alabama

Rhett Hanks, Lake Martin Shoreline Management
Alabama Power Company
1296 Tallassee Street
Dadeville, Alabama 36853

Document Accession #: 20201229-5039 Filed Date: 12/29/2020

LARRY E. SPEAKS & ASSOCIATES, INC.
CONSULTING ENGINEERS & LAND SURVEYORS
535 Herron Street
Montgomery, Alabama 36104
Telephone: 334.262.1091
Facsimile: 334.262.2211

AIRPORTS
BRIDGE DESIGN
CONSTRUCTION MANAGEMENT
ENVIRONMENTAL PERMITS
HIGHWAY DESIGN
LAND DEVELOPMENT PLANNING & DESIGN
LAND USE STUDIES
MUNICIPAL WORKS
PARKS & RECREATION FACILITIES

SEWAGE COLLECTION, TREATMENT & DISPOSAL
SOLID WASTE LANDFILLS
STORM DRAINAGE STUDIES & DESIGN
SUBDIVISIONS
SURVEYING: LAND SURVEYS
CONSTRUCTION SURVEYS
TOPOGRAPHIC MAPS
WATER SUPPLY, TREATMENT & DISTRIBUTION

October 1, 2020

William J. Vargo
7 South Cardinal Heights
Dadeville, AL 36853

RE: Proposed FERC Permit Construction Plan
Lake Martin Land Company
Lake Martin, Dadeville, Alabama
Tallapoosa County

Dear Mr. Vargo:

We are in receipt of your letter dated August 25, 2020 concerning the above referenced project on Lake Martin. We appreciate your feedback and for taking the time to review the proposed Construction Plan. This project has been submitted to APCO and numerous federal and state agencies for review and comment. We have reviewed the items in the letter with the developer and offer the following responses:

The proposed dock plan is configured to meet the APCO and FERC guidelines. The proposed dock footprints meet set back and length restrictions as well as total square footage restrictions. The other waterfront lots labeled (Not a Part) will be permitted locally by APCO and meet applicable permitting guidelines.

The proposed docks will be for use by specific property owners in this plat and their guests, it will not be available for public use.

ALEA Marine Patrol Enforcement is one of the agencies the Developer notified in this process. The developer reached out to ALEA inquiring about the possibility of a no wake buoy for the slough. ALEA denied the request as the project does not meet the guidelines/requirements for a no wake buoy.

The permit process requires, but does not regulate, the NPDES construction stormwater permit for the development. Those permits are issued and regulated by Alabama Department of Environmental Management. The developer will work with his site contractor to minimize potential impacts to the lake.

We thank you for your questions and comments. The developer plans to work with all the neighbors in the area. The developer will be glad to answer any additional questions.

Yours very truly,

Steven E. Speaks, PE, PLS, FACEC
cc. Mr. J.R Adams, LMLC

Document Accession #: 20201229-5039 Filed Date: 12/29/2020

LARRY E. SPEAKS & ASSOCIATES, INC.
CONSULTING ENGINEERS & LAND SURVEYORS
535 Herron Street
Montgomery, Alabama 36104
Telephone: 334.262.1091
Facsimile: 334.262.2211

AIRPORTS
BRIDGE DESIGN
CONSTRUCTION MANAGEMENT
ENVIRONMENTAL PERMITS
HIGHWAY DESIGN
LAND DEVELOPMENT PLANNING & DESIGN
LAND USE STUDIES
MUNICIPAL WORKS
PARKS & RECREATION FACILITIES

SEWAGE COLLECTION, TREATMENT & DISPOSAL
SOLID WASTE LANDFILLS
STORM DRAINAGE STUDIES & DESIGN
SUBDIVISIONS
SURVEYING: LAND SURVEYS
CONSTRUCTION SURVEYS
TOPOGRAPHIC MAPS
WATER SUPPLY, TREATMENT & DISTRIBUTION

August 7, 2020

Charles P. Brunson
85 South Cardinal Heights
Dadeville, AL 36853

RE: Proposed FERC Permit Construction Plan
Lake Martin Land Company
Lake Martin, Dadeville, Alabama
Tallapoosa County

Dear Mr. Brunson:

You are receiving this letter and attached Non-Residential FERC permit Construction Plan because you are an adjacent landowner to the above referenced project. On behalf of the developer, Lake Martin Land Company, we request your comments regarding the construction of five (5) proposed boat docks and one (1) boardwalk on Lake Martin, in Dadeville, Alabama. The site is located in Tallapoosa County, Alabama.

This request is part of the Alabama Power Company's review process. Please review the enclosed plan and return written comments to this office within Thirty (30) days. Feel free to contact this office with any questions.

Yours very truly,

Steven E. Speaks, P.E., P.L.S.

SES/cbb
Enclosures
Cc: file

Document Accession

SENDER: COMPLETE THIS SECTION

- Complete items 1, 2, and 3.
- Print your name and address on the reverse so that we can return the card to you.
- Attach this card to the back of the mailpiece, or on the front if space permits.

1. Article Addressed to:

Charles P. Brunson
85 South Cardinal Heights
Dadeville, AL 36853

9590 9402 4414 8248 9945 44

2. Article Number *(Transfer from service label)*
7007 2560 0003 0312 3294

COMPLETE THIS SECTION ON DELIVERY

A. Signature
X Charles P. Brunson
☐ Agent
☐ Addressee

B. Received by *(Printed Name)* Charles P. Brison
C. Date of Delivery 8-13-20

D. Is delivery address different from item 1? ☐ Yes
If YES, enter delivery address below: ☐ No

3. Service Type
☐ Adult Signature
☐ Adult Signature Restricted Delivery
☑ Certified Mail®
☐ Certified Mail Restricted Delivery
☐ Collect on Delivery
☐ Collect on Delivery Restricted Delivery
☐ Insured Mail
☐ Insured Mail Restricted Delivery (over $500)
☐ Priority Mail Express®
☐ Registered Mail™
☐ Registered Mail Restricted Delivery
☐ Return Receipt for Merchandise
☐ Signature Confirmation™
☐ Signature Confirmation Restricted Delivery

PS Form 3811, July 2015 PSN 7530-02-000-9053 Domestic Return Receipt

7007 2560 0003 0312 3294

U.S. Postal Service™
CERTIFIED MAIL™ RECEIPT
(Domestic Mail Only; No Insurance Coverage Provided)

For delivery information visit our website at www.usps.com®

OFFICIAL USE

Postage	$ 1.40
Certified Fee	3.55
Return Receipt Fee (Endorsement Required)	2.85
Restricted Delivery Fee (Endorsement Required)	
Total Postage & Fees	$ 7.80

Postmark Here
DOWNTOWN STATION AUG 13 2020 36104-9998

Sent To *Charles P. Brunson*
Street, Apt or PO Box *85 South Cardinal Heights*
City, State, *Dadeville, AL 36853*

PS Form 3800, August 2006 See Reverse for Instructions

Charlie & Echo Brunson

August 20, 2020

Re: Proposed FERC Permit Construction Plan

Dear Sir:

We strongly object to this plan.

This plan crams too many docks into too little and inappropriate shoreline.

The plan creates safety problems for boaters and swimmers, especially children.

Please reconsider building these docks.

Regards,

Charlie Brunson Echo Brunson

Charlie & Echo Brunson

Document Accession #: 20201229-5039 Filed Date: 12/29/2020

LARRY E. SPEAKS & ASSOCIATES, INC.
CONSULTING ENGINEERS & LAND SURVEYORS
535 Herron Street
Montgomery, Alabama 36104
Telephone: 334.262.1091
Facsimile: 334.262.2211

AIRPORTS
BRIDGE DESIGN
CONSTRUCTION MANAGEMENT
ENVIRONMENTAL PERMITS
HIGHWAY DESIGN
LAND DEVELOPMENT PLANNING & DESIGN
LAND USE STUDIES
MUNICIPAL WORKS
PARKS & RECREATION FACILITIES

SEWAGE COLLECTION, TREATMENT & DISPOSAL
SOLID WASTE LANDFILLS
STORM DRAINAGE STUDIES & DESIGN
SUBDIVISIONS
SURVEYING: LAND SURVEYS
CONSTRUCTION SURVEYS
TOPOGRAPHIC MAPS
WATER SUPPLY, TREATMENT & DISTRIBUTION

October 1, 2020

Charles P. Brunson
85 South Cardinal Heights
Dadeville, AL 36853

RE: Proposed FERC Permit Construction Plan
Lake Martin Land Company
Lake Martin, Dadeville, Alabama
Tallapoosa County

Dear Mr. Brunson:

We are in receipt of your letter dated August 20, 2020, concerning the above referenced project on Lake Martin. We appreciate your feedback and for taking the time to review the proposed Construction Plan. This project has been submitted to APCO and numerous federal and state agencies for review and comment. We have reviewed the items in the letter with the developer and offer the following responses:

The proposed dock plan is configured to meet the APCO and FERC guidelines. The proposed dock footprints meet set back and length restrictions as well as total square footage restrictions. This plan meets the regulated restrictions. The other waterfront lots labeled (Not a Part) will be permitted locally by APCO and meet applicable permitting guidelines.

We thank you for your questions and comments. The developer plans to work with all the neighbors in this area. The developer will be glad to answer any additional questions.

Yours very truly,

Steven E. Speaks, PE, PLS, FACEC
cc. Mr. J.R Adams, LMLC

Document Accession #: 20201229-5039 Filed Date: 12/29/2020

LARRY E. SPEAKS & ASSOCIATES, INC.
CONSULTING ENGINEERS & LAND SURVEYORS
535 Herron Street
Montgomery, Alabama 36104
Telephone: 334.262.1091
Facsimile: 334.262.2211

AIRPORTS
BRIDGE DESIGN
CONSTRUCTION MANAGEMENT
ENVIRONMENTAL PERMITS
HIGHWAY DESIGN
LAND DEVELOPMENT PLANNING & DESIGN
LAND USE STUDIES
MUNICIPAL WORKS
PARKS & RECREATION FACILITIES

SEWAGE COLLECTION, TREATMENT & DISPOSAL
SOLID WASTE LANDFILLS
STORM DRAINAGE STUDIES & DESIGN
SUBDIVISIONS
SURVEYING: LAND SURVEYS
CONSTRUCTION SURVEYS
TOPOGRAPHIC MAPS
WATER SUPPLY, TREATMENT & DISTRIBUTION

August 7, 2020

Glenice A. Myers
46 Overlook Dr.
Seale, AL 36875

RE: Proposed FERC Permit Construction Plan
Lake Martin Land Company
Lake Martin, Dadeville, Alabama
Tallapoosa County

Dear Mrs. Myers:

You are receiving this letter and attached Non-Residential FERC permit Construction Plan because you are an adjacent landowner to the above referenced project. On behalf of the developer, Lake Martin Land Company, we request your comments regarding the construction of five (5) proposed boat docks and one (1) boardwalk on Lake Martin, in Dadeville, Alabama. The site is located in Tallapoosa County, Alabama.

This request is part of the Alabama Power Company's review process. Please review the enclosed plan and return written comments to this office within Thirty (30) days. Feel free to contact this office with any questions.

Yours very truly,

Steven E. Speaks, P.E., P.L.S.

SES/cbb
Enclosures
Cc: file

Document Accession

SENDER: COMPLETE THIS SECTION

- Complete items 1, 2, and 3.
- Print your name and address on the reverse so that we can return the card to you.
- Attach this card to the back of the mailpiece, or on the front if space permits.

1. Article Addressed to:

Glenice A. Myers
46 Overlook Drive
Seale, AL 36875

9590 9402 4414 8248 9946 74

2. Article Number *(Transfer from service label)*
7007 2560 0003 0312 3492

COMPLETE THIS SECTION ON DELIVERY

A. Signature
x Harley Bryant
☐ Agent
☐ Addressee

B. Received by *(Printed Name)* Harley Bryant
C. Date of Delivery

D. Is delivery address different from item 1? ☐ Yes
If YES, enter delivery address below: ☐ No

3. Service Type
☐ Adult Signature
☐ Adult Signature Restricted Delivery
☑ Certified Mail®
☐ Certified Mail Restricted Delivery
☐ Collect on Delivery
☐ Collect on Delivery Restricted Delivery
☐ Insured Mail
☐ Insured Mail Restricted Delivery (over $500)
☐ Priority Mail Express®
☐ Registered Mail™
☐ Registered Mail Restricted Delivery
☐ Return Receipt for Merchandise
☐ Signature Confirmation™
☐ Signature Confirmation Restricted Delivery

PS Form 3811, July 2015 PSN 7530-02-000-9053 Domestic Return Receipt

7007 2560 0003 0312 3492

U.S. Postal Service™
CERTIFIED MAIL™ RECEIPT
(Domestic Mail Only; No Insurance Coverage Provided)

For delivery information visit our website at www.usps.com®

OFFICIAL USE

Postage	$ 1.40
Certified Fee	3.55
Return Receipt Fee (Endorsement Required)	2.85
Restricted Delivery Fee (Endorsement Required)	
Total Postage & Fees	$ 7.80

Postmark Here
DOWNTOWN STATION
AUG 1 2020

Sent To *Glenice A. Myers*
Street, Apt. No.; or PO Box No. *46 Overlook Drive*
City, State, ZIP+4® *Seale, AL 36875*

PS Form 3800, August 2006 See Reverse for Instructions

Document Accession #: 20201229-5039 Filed Date: 12/29/2020

LARRY E. SPEAKS & ASSOCIATES, INC.
CONSULTING ENGINEERS & LAND SURVEYORS
535 Herron Street
Montgomery, Alabama 36104
Telephone: 334.262.1091
Facsimile: 334.262.2211

AIRPORTS
BRIDGE DESIGN
CONSTRUCTION MANAGEMENT
ENVIRONMENTAL PERMITS
HIGHWAY DESIGN
LAND DEVELOPMENT PLANNING & DESIGN
LAND USE STUDIES
MUNICIPAL WORKS
PARKS & RECREATION FACILITIES

SEWAGE COLLECTION, TREATMENT & DISPOSAL
SOLID WASTE LANDFILLS
STORM DRAINAGE STUDIES & DESIGN
SUBDIVISIONS
SURVEYING: LAND SURVEYS
CONSTRUCTION SURVEYS
TOPOGRAPHIC MAPS
WATER SUPPLY, TREATMENT & DISTRIBUTION

August 7, 2020

Mike Tucker
60 North Cardinal Heights
Dadeville, AL 36853

RE: Proposed FERC Permit Construction Plan
Lake Martin Land Company
Lake Martin, Dadeville, Alabama
Tallapoosa County

Dear Mr. Tucker:

You are receiving this letter and attached Non-Residential FERC permit Construction Plan because you are an adjacent landowner to the above referenced project. On behalf of the developer, Lake Martin Land Company, we request your comments regarding the construction of five (5) proposed boat docks and one (1) boardwalk on Lake Martin, in Dadeville, Alabama. The site is located in Tallapoosa County, Alabama.

This request is part of the Alabama Power Company's review process. Please review the enclosed plan and return written comments to this office within Thirty (30) days. Feel free to contact this office with any questions.

Yours very truly,

Steven E. Speaks, P.E., P.L.S.

SES/cbb
Enclosures
Cc: file

Document Acce

SENDER: COMPLETE THIS SECTION

- Complete items 1, 2, and 3.
- Print your name and address on the reverse so that we can return the card to you.
- Attach this card to the back of the mailpiece, or on the front if space permits.

1. Article Addressed to:

Mike Tucker
60 North Cardinal Heights
Dadeville, AL 36853

9590 9402 4414 8248 9945 06

2. Article Number (Transfer from service label)
7007 2560 0003 0312 3331

COMPLETE THIS SECTION ON DELIVERY

A. Signature
x NP-C19 ☑ Agent ☐ Addressee

B. Received by (Printed Name) NP-C19
C. Date of Delivery 10/10

D. Is delivery address different from item 1? ☐ Yes
If YES, enter delivery address below: ☑ No

3. Service Type
- ☐ Adult Signature
- ☐ Adult Signature Restricted Delivery
- ☑ Certified Mail®
- ☐ Certified Mail Restricted Delivery
- ☐ Collect on Delivery
- ☐ Collect on Delivery Restricted Delivery
- ☐ Insured Mail
- ☐ Insured Mail Restricted Delivery (over $500)
- ☐ Priority Mail Express®
- ☐ Registered Mail™
- ☐ Registered Mail Restricted Delivery
- ☐ Return Receipt for Merchandise
- ☐ Signature Confirmation™
- ☐ Signature Confirmation Restricted Delivery

PS Form 3811, July 2015 PSN 7530-02-000-9053 Domestic Return Receipt

7007 2560 0003 0312 3331

U.S. Postal Service™
CERTIFIED MAIL™ RECEIPT
(Domestic Mail Only; No Insurance Coverage Provided)

For delivery information visit our website at www.usps.com.

OFFICIAL USE

Postage	$ 1.40
Certified Fee	3.55
Return Receipt Fee (Endorsement Required)	2.85
Restricted Delivery Fee (Endorsement Required)	
Total Postage & Fees	$ 7.80

DOWNTOWN STATION
Postmark Here
AUG 11 2020

Sent To *Mike Tucker*
Street, Apt. No or PO Box No. *60 North Cardinal Heights*
City, State, ZIP *Dadeville, AL 36853*

PS Form 3800, See Reverse for Instructions

Document Accession #: 20201229-5039 Filed Date: 12/29/2020

LARRY E. SPEAKS & ASSOCIATES, INC.
CONSULTING ENGINEERS & LAND SURVEYORS
535 Herron Street
Montgomery, Alabama 36104
Telephone: 334.262.1091
Facsimile: 334.262.2211

AIRPORTS
BRIDGE DESIGN
CONSTRUCTION MANAGEMENT
ENVIRONMENTAL PERMITS
HIGHWAY DESIGN
LAND DEVELOPMENT PLANNING & DESIGN
LAND USE STUDIES
MUNICIPAL WORKS
PARKS & RECREATION FACILITIES

SEWAGE COLLECTION, TREATMENT & DISPOSAL
SOLID WASTE LANDFILLS
STORM DRAINAGE STUDIES & DESIGN
SUBDIVISIONS
SURVEYING: LAND SURVEYS
CONSTRUCTION SURVEYS
TOPOGRAPHIC MAPS
WATER SUPPLY, TREATMENT & DISTRIBUTION

August 7, 2020

Jerry R. Knight
1508 Blackhall Ln SE
Decatur, Alabama 35601

RE: Proposed FERC Permit Construction Plan
Lake Martin Land Company
Lake Martin, Dadeville, Alabama
Tallapoosa County

Dear Mr. Knight:

You are receiving this letter and attached Non-Residential FERC permit Construction Plan because you are an adjacent landowner to the above referenced project. On behalf of the developer, Lake Martin Land Company, we request your comments regarding the construction of five (5) proposed boat docks and one (1) boardwalk on Lake Martin, in Dadeville, Alabama. The site is located in Tallapoosa County, Alabama.

This request is part of the Alabama Power Company's review process. Please review the enclosed plan and return written comments to this office within Thirty (30) days. Feel free to contact this office with any questions.

Yours very truly,

Steven E. Speaks, P.E., P.L.S.

SES/cbb
Enclosures
Cc: file

Document Accessi

SENDER: COMPLETE THIS SECTION

- Complete items 1, 2, and 3.
- Print your name and address on the reverse so that we can return the card to you.
- Attach this card to the back of the mailpiece, or on the front if space permits.

1. Article Addressed to:

Jerry R. Knight
1508 Blackhall Lane SE
Decatur, AL 35601

9590 9402 4414 8248 9947 42

2. Article Number *(Transfer from service label)*
7007 2560 0003 0312 3423

COMPLETE THIS SECTION ON DELIVERY

A. Signature
x WJM CJT
☐ Agent
☐ Addressee

B. Received by *(Printed Name)* COVID 19
C. Date of Delivery 13 Aug 2

D. Is delivery address different from item 1? ☐ Yes
If YES, enter delivery address below: ☐ No
For Customer

3. Service Type
☐ Adult Signature
☐ Adult Signature Restricted Delivery
☑ Certified Mail®
☐ Certified Mail Restricted Delivery
☐ Collect on Delivery
☐ Collect on Delivery Restricted Delivery
☐ Insured Mail
☐ Insured Mail Restricted Delivery (over $500)
☐ Priority Mail Express®
☐ Registered Mail™
☐ Registered Mail Restricted Delivery
☐ Return Receipt for Merchandise
☐ Signature Confirmation™
☐ Signature Confirmation Restricted Delivery

PS Form 3811, July 2015 PSN 7530-02-000-9053 — Domestic Return Receipt

7007 2560 0003 0312 3423

U.S. Postal Service™
CERTIFIED MAIL™ RECEIPT
(Domestic Mail Only; No Insurance Coverage Provided)

For delivery information visit our website at www.usps.com®

OFFICIAL USE

Postage	$ 1.40
Certified Fee	3.55
Return Receipt Fee (Endorsement Required)	2.85
Restricted Delivery Fee (Endorsement Required)	
Total Postage & Fees	$ 7.80

DOWNTOWN STA
Postmark Here
AUG 11 2020
35114-9998

Sent To *Jerry R. Knight*
Street, Apt. or PO Box *1508 Blackhall Lane SE*
City, State, *Decatur, AL 35601*

PS Form 3800, August 2006 — See Reverse for Instructions

Document Accession #: 20201229-5039 Filed Date: 12/29/2020

LARRY E. SPEAKS & ASSOCIATES, INC.
CONSULTING ENGINEERS & LAND SURVEYORS
535 Herron Street
Montgomery, Alabama 36104
Telephone: 334.262.1091
Facsimile: 334.262.2211

AIRPORTS
BRIDGE DESIGN
CONSTRUCTION MANAGEMENT
ENVIRONMENTAL PERMITS
HIGHWAY DESIGN
LAND DEVELOPMENT PLANNING & DESIGN
LAND USE STUDIES
MUNICIPAL WORKS
PARKS & RECREATION FACILITIES

SEWAGE COLLECTION, TREATMENT & DISPOSAL
SOLID WASTE LANDFILLS
STORM DRAINAGE STUDIES & DESIGN
SUBDIVISIONS
SURVEYING: LAND SURVEYS
CONSTRUCTION SURVEYS
TOPOGRAPHIC MAPS
WATER SUPPLY, TREATMENT & DISTRIBUTION

August 7, 2020

AUO Investments, LLC
1994 Wire Road
Auburn, AL 36832

RE: Proposed FERC Permit Construction Plan
Lake Martin Land Company
Lake Martin, Dadeville, Alabama
Tallapoosa County

To Whom it May Concern:

You are receiving this letter and attached Non-Residential FERC permit Construction Plan because you are an adjacent landowner to the above referenced project. On behalf of the developer, Lake Martin Land Company, we request your comments regarding the construction of five (5) proposed boat docks and one (1) boardwalk on Lake Martin, in Dadeville, Alabama. The site is located in Tallapoosa County, Alabama.

This request is part of the Alabama Power Company's review process. Please review the enclosed plan and return written comments to this office within Thirty (30) days. Feel free to contact this office with any questions.

Yours very truly,

Steven E. Speaks, P.E., P.L.S.

SES/cbb
Enclosures
Cc: file

Document Accession

SENDER: COMPLETE THIS SECTION

- Complete items 1, 2, and 3.
- Print your name and address on the reverse so that we can return the card to you.
- Attach this card to the back of the mailpiece, or on the front if space permits.

1. Article Addressed to:

AUO Investments, LLC
1994 Wire Road
Auburn, AL 36832

9590 9402 4414 8248 9993 27

2. Article Number *(Transfer from service label)*
7007 2560 0003 0312 3393

COMPLETE THIS SECTION ON DELIVERY

A. Signature
X Cov-19 PJ
☑ Agent
☐ Addressee

B. Received by *(Printed Name)* COV-19 PJ
C. Date of Delivery 8-24-20

D. Is delivery address different from item 1? ☐ Yes
If YES, enter delivery address below: ☐ No

3. Service Type
- ☐ Adult Signature
- ☐ Adult Signature Restricted Delivery
- ☑ Certified Mail®
- ☐ Certified Mail Restricted Delivery
- ☐ Collect on Delivery
- ☐ Collect on Delivery Restricted Delivery
- ☐ Insured Mail
- ☐ Insured Mail Restricted Delivery (over $500)
- ☐ Priority Mail Express®
- ☐ Registered Mail™
- ☐ Registered Mail Restricted Delivery
- ☐ Return Receipt for Merchandise
- ☐ Signature Confirmation™
- ☐ Signature Confirmation Restricted Delivery

PS Form 3811, July 2015 PSN 7530-02-000-9053 Domestic Return Receipt

7007 2560 0003 0312 3393

U.S. Postal Service™
CERTIFIED MAIL™ RECEIPT
(Domestic Mail Only; No Insurance Coverage Provided)

For delivery information visit our website at www.usps.com®

OFFICIAL USE

Postage	$ 1.40
Certified Fee	3.55
Return Receipt Fee (Endorsement Required)	2.85
Restricted Delivery Fee (Endorsement Required)	
Total Postage & Fees	$ 7.80

DOWNTOWN STATION AUG 1 2020 Postmark Here 36104-9998

Sent To *AUO Investments, LLC*
Street, Apt. or PO Box *1994 Wire Road*
City, State *Auburn, AL 36832*

PS Form 3 ... See Reverse for Instructions

Document Accession #: 20201229-5039 Filed Date: 12/29/2020

LARRY E. SPEAKS & ASSOCIATES, INC.
CONSULTING ENGINEERS & LAND SURVEYORS
535 Herron Street
Montgomery, Alabama 36104
Telephone: 334.262.1091
Facsimile: 334.262.2211

AIRPORTS
BRIDGE DESIGN
CONSTRUCTION MANAGEMENT
ENVIRONMENTAL PERMITS
HIGHWAY DESIGN
LAND DEVELOPMENT PLANNING & DESIGN
LAND USE STUDIES
MUNICIPAL WORKS
PARKS & RECREATION FACILITIES

SEWAGE COLLECTION, TREATMENT & DISPOSAL
SOLID WASTE LANDFILLS
STORM DRAINAGE STUDIES & DESIGN
SUBDIVISIONS
SURVEYING: LAND SURVEYS
CONSTRUCTION SURVEYS
TOPOGRAPHIC MAPS
WATER SUPPLY, TREATMENT & DISTRIBUTION

August 7, 2020

Steve Jordan
2958 Arthur Road
Fort Mill, South Carolina 29707

RE: Proposed FERC Permit Construction Plan
Lake Martin Land Company
Lake Martin, Dadeville, Alabama
Tallapoosa County

Dear Mr. Jordan:

You are receiving this letter and attached Non-Residential FERC permit Construction Plan because you are an adjacent landowner to the above referenced project. On behalf of the developer, Lake Martin Land Company, we request your comments regarding the construction of five (5) proposed boat docks and one (1) boardwalk on Lake Martin, in Dadeville, Alabama. The site is located in Tallapoosa County, Alabama.

This request is part of the Alabama Power Company's review process. Please review the enclosed plan and return written comments to this office within Thirty (30) days. Feel free to contact this office with any questions.

Yours very truly,

Steven E. Speaks

Steven E. Speaks, P.E., P.L.S.

SES/cbb
Enclosures
Cc: file

Document Accession #

SENDER: COMPLETE THIS SECTION

- Complete items 1, 2, and 3.
- Print your name and address on the reverse so that we can return the card to you.
- Attach this card to the back of the mailpiece, or on the front if space permits.

1. Article Addressed to:

Steve Jordan
2958 Arthur Road
Fort Mill, South Carolina 29707

9590 9402 4414 8248 9947 28

2. Article Number *(Transfer from service label)*
7007 2560 0003 0312 3447

COMPLETE THIS SECTION ON DELIVERY

A. Signature
x Steve Jordan
☑ Agent
☐ Addressee

B. Received by *(Printed Name)* MS/Rtla/C-19
C. Date of Delivery 8/14/20

D. Is delivery address different from item 1? ☐ Yes
If YES, enter delivery address below: ☐ No

3. Service Type
☐ Adult Signature
☐ Adult Signature Restricted Delivery
☑ Certified Mail®
☐ Certified Mail Restricted Delivery
☐ Collect on Delivery
☐ Collect on Delivery Restricted Delivery
☐ Insured Mail
☐ Insured Mail Restricted Delivery (over $500)
☐ Priority Mail Express®
☐ Registered Mail™
☐ Registered Mail Restricted Delivery
☐ Return Receipt for Merchandise
☐ Signature Confirmation™
☐ Signature Confirmation Restricted Delivery

PS Form 3811, July 2015 PSN 7530-02-000-9053 Domestic Return Receipt

7007 2560 0003 0312 3447

U.S. Postal Service™
CERTIFIED MAIL™ RECEIPT
(Domestic Mail Only; No Insurance Coverage Provided)
For delivery information visit our website at www.usps.com®
OFFICIAL USE

Postage	$ 1.40
Certified Fee	3.55
Return Receipt Fee (Endorsement Required)	2.85
Restricted Delivery Fee (Endorsement Required)	
Total Postage & Fees	$ 7.80

DOWNTOWN S.T. AUG 2020 35104-9998 Postmark Here

Sent To *Steve Jordan*
Street, Apt. N or PO Box No *2958 Arthur Road*
City, State, Zi *Fort Mill, South Carolina 29707*

PS Form 3800, August 2006 See Reverse for Instructions

Document Accession #: 20201229-5039 Filed Date: 12/29/2020

LARRY E. SPEAKS & ASSOCIATES, INC.
CONSULTING ENGINEERS & LAND SURVEYORS
535 Herron Street
Montgomery, Alabama 36104
Telephone: 334.262.1091
Facsimile: 334.262.2211

AIRPORTS
BRIDGE DESIGN
CONSTRUCTION MANAGEMENT
ENVIRONMENTAL PERMITS
HIGHWAY DESIGN
LAND DEVELOPMENT PLANNING & DESIGN
LAND USE STUDIES
MUNICIPAL WORKS
PARKS & RECREATION FACILITIES

SEWAGE COLLECTION, TREATMENT & DISPOSAL
SOLID WASTE LANDFILLS
STORM DRAINAGE STUDIES & DESIGN
SUBDIVISIONS
SURVEYING: LAND SURVEYS
CONSTRUCTION SURVEYS
TOPOGRAPHIC MAPS
WATER SUPPLY, TREATMENT & DISTRIBUTION

August 7, 2020

Francisco Munoz
4212 Greenfern Dr
Orlando Florida 32810

RE: Proposed FERC Permit Construction Plan
Lake Martin Land Company
Lake Martin, Dadeville, Alabama
Tallapoosa County

Dear Mr. Munoz:

You are receiving this letter and attached Non-Residential FERC permit Construction Plan because you are an adjacent landowner to the above referenced project. On behalf of the developer, Lake Martin Land Company, we request your comments regarding the construction of five (5) proposed boat docks and one (1) boardwalk on Lake Martin, in Dadeville, Alabama. The site is located in Tallapoosa County, Alabama.

This request is part of the Alabama Power Company's review process. Please review the enclosed plan and return written comments to this office within Thirty (30) days. Feel free to contact this office with any questions.

Yours very truly,

Steven E. Speaks, P.E., P.L.S.

SES/cbb
Enclosures
Cc: file

Document Acces Filed

SENDER: COMPLETE THIS SECTION

- Complete items 1, 2, and 3.
- Print your name and address on the reverse so that we can return the card to you.
- Attach this card to the back of the mailpiece, or on the front if space permits.

1. Article Addressed to:

Francisco Munoz
4212 Greenfern Drive
Orlando, FL 32810

9590 9402 4414 8248 9993 34

2. Article Number *(Transfer from service label)*
7007 2560 0003 0312 3386

COMPLETE THIS SECTION ON DELIVERY

A. Signature
X Kw 1014 ☐ Agent ☐ Addressee

B. Received by *(Printed Name)* C19 C. Date of Delivery 8/18

D. Is delivery address different from item 1? ☐ Yes
If YES, enter delivery address below: ☐ No

Left in mail Box

3. Service Type
☐ Adult Signature
☐ Adult Signature Restricted Delivery
☑ Certified Mail®
☐ Certified Mail Restricted Delivery
☐ Collect on Delivery
☐ Collect on Delivery Restricted Delivery
☐ Insured Mail
☐ Insured Mail Restricted Delivery (over $500)
☐ Priority Mail Express®
☐ Registered Mail™
☐ Registered Mail Restricted Delivery
☐ Return Receipt for Merchandise
☐ Signature Confirmation™
☐ Signature Confirmation Restricted Delivery

PS Form 3811, July 2015 PSN 7530-02-000-9053 Domestic Return Receipt

7007 2560 0003 0312 3386

U.S. Postal Service™
CERTIFIED MAIL™ RECEIPT
(Domestic Mail Only; No Insurance Coverage Provided)

For delivery information visit our website at www.usps.com®

OFFICIAL USE

Postage	$ 1.40
Certified Fee	3.55
Return Receipt Fee (Endorsement Required)	2.85
Restricted Delivery Fee (Endorsement Required)	
Total Postage & Fees	$ 7.80

DOWNTOWN STATION AUG 17 2020 35704-9998 Postmark Here

Sent To *Francisco Munoz*
Street, Apt. or PO Box *4212 Greenfern Drive*
City, State, *Orlando, FL 32810*

PS Form 3800, August 2006 See Reverse for Instructions

Document Accession #: 20201229-5039 Filed Date: 12/29/2020

LARRY E. SPEAKS & ASSOCIATES, INC.
CONSULTING ENGINEERS & LAND SURVEYORS
535 Herron Street
Montgomery, Alabama 36104
Telephone: 334.262.1091
Facsimile: 334.262.2211

AIRPORTS
BRIDGE DESIGN
CONSTRUCTION MANAGEMENT
ENVIRONMENTAL PERMITS
HIGHWAY DESIGN
LAND DEVELOPMENT PLANNING & DESIGN
LAND USE STUDIES
MUNICIPAL WORKS
PARKS & RECREATION FACILITIES

SEWAGE COLLECTION, TREATMENT & DISPOSAL
SOLID WASTE LANDFILLS
STORM DRAINAGE STUDIES & DESIGN
SUBDIVISIONS
SURVEYING: LAND SURVEYS
CONSTRUCTION SURVEYS
TOPOGRAPHIC MAPS
WATER SUPPLY, TREATMENT & DISTRIBUTION

August 7, 2020

Monica Hendricks
431 Dogwood Trail
Dadeville, AL 36853

RE: Proposed FERC Permit Construction Plan
Lake Martin Land Company
Lake Martin, Dadeville, Alabama
Tallapoosa County

Dear Ms. Hendricks:

You are receiving this letter and attached Non-Residential FERC permit Construction Plan because you are an adjacent landowner to the above referenced project. On behalf of the developer, Lake Martin Land Company, we request your comments regarding the construction of five (5) proposed boat docks and one (1) boardwalk on Lake Martin, in Dadeville, Alabama. The site is located in Tallapoosa County, Alabama.

This request is part of the Alabama Power Company's review process. Please review the enclosed plan and return written comments to this office within Thirty (30) days. Feel free to contact this office with any questions.

Yours very truly,

Steven E. Speaks, P.E., P.L.S.

SES/cbb
Enclosures
Cc: file

Document Acces Filed

SENDER: COMPLETE THIS SECTION

- Complete items 1, 2, and 3.
- Print your name and address on the reverse so that we can return the card to you.
- Attach this card to the back of the mailpiece, or on the front if space permits.

1. Article Addressed to:

Monica Hendricks
431 Dogwood Trail
Dadeville, AL 36853

9590 9402 4414 8248 9997 54

2. Article Number *(Transfer from service label)*
7007 2560 0003 0312 3379

COMPLETE THIS SECTION ON DELIVERY

A. Signature
X Monica Hendricks ☐ Agent ☐ Addressee

B. Received by *(Printed Name)* Monica Hendricks
C. Date of Delivery

D. Is delivery address different from item 1? ☐ Yes
If YES, enter delivery address below: ☐ No

3. Service Type
- ☐ Adult Signature
- ☐ Adult Signature Restricted Delivery
- ☑ Certified Mail®
- ☐ Certified Mail Restricted Delivery
- ☐ Collect on Delivery
- ☐ Collect on Delivery Restricted Delivery
- ☐ Insured Mail
- ☐ Insured Mail Restricted Delivery (over $500)
- ☐ Priority Mail Express®
- ☐ Registered Mail™
- ☐ Registered Mail Restricted Delivery
- ☐ Return Receipt for Merchandise
- ☐ Signature Confirmation™
- ☐ Signature Confirmation Restricted Delivery

PS Form **3811**, July 2015 PSN 7530-02-000-9053 Domestic Return Receipt

7007 2560 0003 0312 3379

U.S. Postal Service™
CERTIFIED MAIL™ RECEIPT
(Domestic Mail Only; No Insurance Coverage Provided)

For delivery information visit our website at www.usps.com

OFFICIAL USE

Postage	$ 1.40
Certified Fee	3.55
Return Receipt Fee (Endorsement Required)	2.85
Restricted Delivery Fee (Endorsement Required)	
Total Postage & Fees	$ 7.80

DOWNTOWN STATION AUG 2020 36104-9998
Postmark Here

Sent To *Monica Hendricks*
Street, Apt. or PO Box N *431 Dogwood Trail*
City, State, *Dadeville, AL 36853*

PS Form 380 ... ions

Document Accession #: 20201229-5039 Filed Date: 12/29/2020

LARRY E. SPEAKS & ASSOCIATES, INC.
CONSULTING ENGINEERS & LAND SURVEYORS
535 Herron Street
Montgomery, Alabama 36104
Telephone: 334.262.1091
Facsimile: 334.262.2211

AIRPORTS
BRIDGE DESIGN
CONSTRUCTION MANAGEMENT
ENVIRONMENTAL PERMITS
HIGHWAY DESIGN
LAND DEVELOPMENT PLANNING & DESIGN
LAND USE STUDIES
MUNICIPAL WORKS
PARKS & RECREATION FACILITIES

SEWAGE COLLECTION, TREATMENT & DISPOSAL
SOLID WASTE LANDFILLS
STORM DRAINAGE STUDIES & DESIGN
SUBDIVISIONS
SURVEYING: LAND SURVEYS
CONSTRUCTION SURVEYS
TOPOGRAPHIC MAPS
WATER SUPPLY, TREATMENT & DISTRIBUTION

August 7, 2020

Hubbard Maroney, Jr.
59 Pebble Beach Lane
Dadeville, AL 36853

RE: Proposed FERC Permit Construction Plan
Lake Martin Land Company
Lake Martin, Dadeville, Alabama
Tallapoosa County

Dear Mr. Maroney:

You are receiving this letter and attached Non-Residential FERC permit Construction Plan because you are an adjacent landowner to the above referenced project. On behalf of the developer, Lake Martin Land Company, we request your comments regarding the construction of five (5) proposed boat docks and one (1) boardwalk on Lake Martin, in Dadeville, Alabama. The site is located in Tallapoosa County, Alabama.

This request is part of the Alabama Power Company's review process. Please review the enclosed plan and return written comments to this office within Thirty (30) days. Feel free to contact this office with any questions.

Yours very truly,

Steven E. Speaks, P.E., P.L.S.

SES/cbb
Enclosures
Cc: file

Document Accession

SENDER: COMPLETE THIS SECTION

- Complete items 1, 2, and 3.
- Print your name and address on the reverse so that we can return the card to you.
- Attach this card to the back of the mailpiece, or on the front if space permits.

1. Article Addressed to:

Hubbard Maroney, Jr.
59 Pebble Beach Lane
Dadeville, AL 36853

9590 9402 4414 8248 9946 81

2. Article Number *(Transfer from service label)*
7007 2560 0003 0312 3485

COMPLETE THIS SECTION ON DELIVERY

A. Signature
X Hubb Maroney ☐ Agent ☐ Addressee

B. Received by *(Printed Name)* C. Date of Delivery 8-13-20

D. Is delivery address different from Item 1? ☐ Yes
If YES, enter delivery address below: ☐ No

3. Service Type
- ☐ Adult Signature
- ☐ Adult Signature Restricted Delivery
- ☑ Certified Mail®
- ☐ Certified Mail Restricted Delivery
- ☐ Collect on Delivery
- ☐ Collect on Delivery Restricted Delivery
- ☐ Insured Mail
- ☐ Insured Mail Restricted Delivery (over $500)
- ☐ Priority Mail Express®
- ☐ Registered Mail™
- ☐ Registered Mail Restricted Delivery
- ☐ Return Receipt for Merchandise
- ☐ Signature Confirmation™
- ☐ Signature Confirmation Restricted Delivery

PS Form 3811, July 2015 PSN 7530-02-000-9053 Domestic Return Receipt

7007 2560 0003 0312 3485

U.S. Postal Service™
CERTIFIED MAIL™ RECEIPT
(Domestic Mail Only; No Insurance Coverage Provided)

For delivery information visit our website at www.usps.com®

OFFICIAL USE

Postage	$ 1.40
Certified Fee	3.55
Return Receipt Fee (Endorsement Required)	2.85
Restricted Delivery Fee (Endorsement Required)	
Total Postage & Fees	$ 7.80

DOWNTOWN STA AUG 2020 36104 Postmark Here

Sent To *Hubbard Maroney, Jr.*
Street, Apt. No or PO Box No. *59 Pebble Beach Lane*
City, State, ZIP *Dadeville, AL 36853*

PS Form 3800, August 2006 See Reverse for Instructions

Document Accession #: 20201229-5039 Filed Date: 12/29/2020

LARRY E. SPEAKS & ASSOCIATES, INC.
CONSULTING ENGINEERS & LAND SURVEYORS
535 Herron Street
Montgomery, Alabama 36104
Telephone: 334.262.1091
Facsimile: 334.262.2211

AIRPORTS
BRIDGE DESIGN
CONSTRUCTION MANAGEMENT
ENVIRONMENTAL PERMITS
HIGHWAY DESIGN
LAND DEVELOPMENT PLANNING & DESIGN
LAND USE STUDIES
MUNICIPAL WORKS
PARKS & RECREATION FACILITIES

SEWAGE COLLECTION, TREATMENT & DISPOSAL
SOLID WASTE LANDFILLS
STORM DRAINAGE STUDIES & DESIGN
SUBDIVISIONS
SURVEYING: LAND SURVEYS
CONSTRUCTION SURVEYS
TOPOGRAPHIC MAPS
WATER SUPPLY, TREATMENT & DISTRIBUTION

August 7, 2020

James R Poeppelmeier
34 North Cardinal Heights
Dadeville, AL 36853

RE: Proposed FERC Permit Construction Plan
Lake Martin Land Company
Lake Martin, Dadeville, Alabama
Tallapoosa County

Dear Mr. Poeppelmeier:

You are receiving this letter and attached Non-Residential FERC permit Construction Plan because you are an adjacent landowner to the above referenced project. On behalf of the developer, Lake Martin Land Company, we request your comments regarding the construction of five (5) proposed boat docks and one (1) boardwalk on Lake Martin, in Dadeville, Alabama. The site is located in Tallapoosa County, Alabama.

This request is part of the Alabama Power Company's review process. Please review the enclosed plan and return written comments to this office within Thirty (30) days. Feel free to contact this office with any questions.

Yours very truly,

Steven E. Speaks, P.E., P.L.S.

SES/cbb
Enclosures
Cc: file

Document Accession #:

SENDER: COMPLETE THIS SECTION

- Complete items 1, 2, and 3.
- Print your name and address on the reverse so that we can return the card to you.
- Attach this card to the back of the mailpiece, or on the front if space permits.

1. Article Addressed to:

James R. Poeppelmeier
34 North Cardinal Heights
Dadeville, AL 36853

9590 9402 4414 8248 9945 13

2. Article Number *(Transfer from service label)*
7007 2560 0003 0312 3324

COMPLETE THIS SECTION ON DELIVERY

A. Signature
X [signature] ☐ Agent ☐ Addressee

B. Received by *(Printed Name)* Flora Poeppelmeier
C. Date of Delivery 8-13-20

D. Is delivery address different from item 1? ☐ Yes
If YES, enter delivery address below: ☐ No

3. Service Type
☐ Adult Signature
☐ Adult Signature Restricted Delivery
☑ Certified Mail®
☐ Certified Mail Restricted Delivery
☐ Collect on Delivery
☐ Collect on Delivery Restricted Delivery
☐ Insured Mail
☐ Insured Mail Restricted Delivery (over $500)
☐ Priority Mail Express®
☐ Registered Mail™
☐ Registered Mail Restricted Delivery
☐ Return Receipt for Merchandise
☐ Signature Confirmation™
☐ Signature Confirmation Restricted Delivery

PS Form **3811**, July 2015 PSN 7530-02-000-9053 Domestic Return Receipt

7007 2560 0003 0312 3324

U.S. Postal Service™
CERTIFIED MAIL™ RECEIPT
(Domestic Mail Only; No Insurance Coverage Provided)

For delivery information visit our website at www.usps.com®

OFFICIAL USE

Postage	$ 1.40
Certified Fee	3.55
Return Receipt Fee (Endorsement Required)	2.85
Restricted Delivery Fee (Endorsement Required)	
Total Postage & Fees	$ 7.80

DOWNTOWN STATION AUG 11 2020 Postmark Here 36104-9998

Sent To *James R. Poeppelmeier*
Street, Apt. No.; or PO Box No. *34 North Cardinal Heights*
City, State, ZIP+4 *Dadeville, AL 36853*

PS Form 3800, August 2006 See Reverse for Instructions

Document Accession #: 20201229-5039 Filed Date: 12/29/2020

LARRY E. SPEAKS & ASSOCIATES, INC.
CONSULTING ENGINEERS & LAND SURVEYORS
535 Herron Street
Montgomery, Alabama 36104
Telephone: 334.262.1091
Facsimile: 334.262.2211

AIRPORTS
BRIDGE DESIGN
CONSTRUCTION MANAGEMENT
ENVIRONMENTAL PERMITS
HIGHWAY DESIGN
LAND DEVELOPMENT PLANNING & DESIGN
LAND USE STUDIES
MUNICIPAL WORKS
PARKS & RECREATION FACILITIES

SEWAGE COLLECTION, TREATMENT & DISPOSAL
SOLID WASTE LANDFILLS
STORM DRAINAGE STUDIES & DESIGN
SUBDIVISIONS
SURVEYING: LAND SURVEYS
CONSTRUCTION SURVEYS
TOPOGRAPHIC MAPS
WATER SUPPLY, TREATMENT & DISTRIBUTION

August 7, 2020

Terry L. Gantt
101 Pebble Beach Lane
Dadeville, AL 36853

RE: Proposed FERC Permit Construction Plan
Lake Martin Land Company
Lake Martin, Dadeville, Alabama
Tallapoosa County

Dear Mr. Gantt:

You are receiving this letter and attached Non-Residential FERC permit Construction Plan because you are an adjacent landowner to the above referenced project. On behalf of the developer, Lake Martin Land Company, we request your comments regarding the construction of five (5) proposed boat docks and one (1) boardwalk on Lake Martin, in Dadeville, Alabama. The site is located in Tallapoosa County, Alabama.

This request is part of the Alabama Power Company's review process. Please review the enclosed plan and return written comments to this office within Thirty (30) days. Feel free to contact this office with any questions.

Yours very truly,

Steven E. Speaks, P.E., P.L.S.

SES/cbb
Enclosures
Cc: file

Document Accessio

SENDER: COMPLETE THIS SECTION

- Complete Items 1, 2, and 3.
- Print your name and address on the reverse so that we can return the card to you.
- Attach this card to the back of the mailpiece, or on the front if space permits.

1. Article Addressed to:

Terry L. Gantt
101 Pebble Beach Lane
Dadeville, AL 36853

9590 9402 4414 8248 9947 04

2. Article Number *(Transfer from service label)*
7007 2560 0003 0312 3461

COMPLETE THIS SECTION ON DELIVERY

A. Signature
X Terry Gantt
☐ Agent
☐ Addressee

B. Received by *(Printed Name)* Terry Gantt
C. Date of Delivery 8/13-16

D. Is delivery address different from item 1? ☐ Yes
If YES, enter delivery address below: ☐ No

3. Service Type
☐ Adult Signature
☐ Adult Signature Restricted Delivery
☑ Certified Mail®
☐ Certified Mail Restricted Delivery
☐ Collect on Delivery
☐ Collect on Delivery Restricted Delivery
☐ Insured Mail
☐ Insured Mail Restricted Delivery (over $500)
☐ Priority Mail Express®
☐ Registered Mail™
☐ Registered Mail Restricted Delivery
☐ Return Receipt for Merchandise
☐ Signature Confirmation™
☐ Signature Confirmation Restricted Delivery

PS Form 3811, July 2015 PSN 7530-02-000-9053 Domestic Return Receipt

7007 2560 0003 0312 3461

U.S. Postal Service™
CERTIFIED MAIL™ RECEIPT
(Domestic Mail Only; No Insurance Coverage Provided)

For delivery information visit our website at www.usps.com®

OFFICIAL USE

Postage	$ 1.40
Certified Fee	3.55
Return Receipt Fee (Endorsement Required)	2.85
Restricted Delivery Fee (Endorsement Required)	
Total Postage & Fees	$ 7.80

Postmark Here
DOWNTOWN S
AUG 2020
36104-9998

Sent To *Terry L. Gantt*
Street, Apt. No or PO Box No. *101 Pebble Beach Lane*
City, State, ZIP+4 *Dadeville, AL 36853*

PS Form 3800, August 2006 See Reverse for Instructions

Document Accession #: 20201229-5039 Filed Date: 12/29/2020

LARRY E. SPEAKS & ASSOCIATES, INC.
CONSULTING ENGINEERS & LAND SURVEYORS
535 Herron Street
Montgomery, Alabama 36104
Telephone: 334.262.1091
Facsimile: 334.262.2211

AIRPORTS
BRIDGE DESIGN
CONSTRUCTION MANAGEMENT
ENVIRONMENTAL PERMITS
HIGHWAY DESIGN
LAND DEVELOPMENT PLANNING & DESIGN
LAND USE STUDIES
MUNICIPAL WORKS
PARKS & RECREATION FACILITIES

SEWAGE COLLECTION, TREATMENT & DISPOSAL
SOLID WASTE LANDFILLS
STORM DRAINAGE STUDIES & DESIGN
SUBDIVISIONS
SURVEYING: LAND SURVEYS
CONSTRUCTION SURVEYS
TOPOGRAPHIC MAPS
WATER SUPPLY, TREATMENT & DISTRIBUTION

August 7, 2020

Betty J. Shuler
121 Pebble Beach Lane
Dadeville, AL 36853

RE: Proposed FERC Permit Construction Plan
Lake Martin Land Company
Lake Martin, Dadeville, Alabama
Tallapoosa County

Dear Ms. Shuler:

You are receiving this letter and attached Non-Residential FERC permit Construction Plan because you are an adjacent landowner to the above referenced project. On behalf of the developer, Lake Martin Land Company, we request your comments regarding the construction of five (5) proposed boat docks and one (1) boardwalk on Lake Martin, in Dadeville, Alabama. The site is located in Tallapoosa County, Alabama.

This request is part of the Alabama Power Company's review process. Please review the enclosed plan and return written comments to this office within Thirty (30) days. Feel free to contact this office with any questions.

Yours very truly,

Steven E. Speaks, P.E., P.L.S.

SES/cbb
Enclosures
Cc: file

Document Accessi

SENDER: COMPLETE THIS SECTION

- Complete items 1, 2, and 3.
- Print your name and address on the reverse so that we can return the card to you.
- Attach this card to the back of the mailpiece, or on the front if space permits.

1. Article Addressed to:

Betty J. Shuler
121 Pebble Beach Lane
Dadeville, AL 36853

9590 9402 4414 8248 9946 98

2. Article Number *(Transfer from service label)*
7007 2560 0003 0312 3478

COMPLETE THIS SECTION ON DELIVERY

A. Signature
X B J Shuler
☐ Agent
☐ Addressee

B. Received by *(Printed Name)* Brian Shuler
C. Date of Delivery 8-13-20

D. Is delivery address different from item 1? ☐ Yes
If YES, enter delivery address below: ☐ No

3. Service Type
☐ Adult Signature
☐ Adult Signature Restricted Delivery
☑ Certified Mail®
☐ Certified Mail Restricted Delivery
☐ Collect on Delivery
☐ Collect on Delivery Restricted Delivery
☐ Insured Mail
☐ Insured Mail Restricted Delivery (over $500)
☐ Priority Mail Express®
☐ Registered Mail™
☐ Registered Mail Restricted Delivery
☐ Return Receipt for Merchandise
☐ Signature Confirmation™
☐ Signature Confirmation Restricted Delivery

PS Form 3811, July 2015 PSN 7530-02-000-9053 — Domestic Return Receipt

7007 2560 0003 0312 3478

U.S. Postal Service™
CERTIFIED MAIL™ RECEIPT
(Domestic Mail Only; No Insurance Coverage Provided)

For delivery information visit our website at www.usps.com®

OFFICIAL USE

Postage	$ 1.40
Certified Fee	3.55
Return Receipt Fee (Endorsement Required)	2.85
Restricted Delivery Fee (Endorsement Required)	
Total Postage & Fees	$ 7.80

DOWNTOWN AUG 2020 36104-9998 Postmark Here

Sent To *Betty J. Shuler*
Street, Apt. No.; or PO Box No. *121 Pebble Beach Lane*
City, State, ZIP+4 *Dadeville, AL 36853*

PS Form 3800, August 2006 — See Reverse for Instructions

Document Accession #: 20201229-5039 Filed Date: 12/29/2020

LARRY E. SPEAKS & ASSOCIATES, INC.
CONSULTING ENGINEERS & LAND SURVEYORS
535 Herron Street
Montgomery, Alabama 36104
Telephone: 334.262.1091
Facsimile: 334.262.2211

AIRPORTS
BRIDGE DESIGN
CONSTRUCTION MANAGEMENT
ENVIRONMENTAL PERMITS
HIGHWAY DESIGN
LAND DEVELOPMENT PLANNING & DESIGN
LAND USE STUDIES
MUNICIPAL WORKS
PARKS & RECREATION FACILITIES

SEWAGE COLLECTION, TREATMENT & DISPOSAL
SOLID WASTE LANDFILLS
STORM DRAINAGE STUDIES & DESIGN
SUBDIVISIONS
SURVEYING: LAND SURVEYS
CONSTRUCTION SURVEYS
TOPOGRAPHIC MAPS
WATER SUPPLY, TREATMENT & DISTRIBUTION

August 7, 2020

Wilmer R. Mathis
104 Lakewood Lane
Dadeville, AL 36853

RE: Proposed FERC Permit Construction Plan
Lake Martin Land Company
Lake Martin, Dadeville, Alabama
Tallapoosa County

Dear Mr. Mathis:

You are receiving this letter and attached Non-Residential FERC permit Construction Plan because you are an adjacent landowner to the above referenced project. On behalf of the developer, Lake Martin Land Company, we request your comments regarding the construction of five (5) proposed boat docks and one (1) boardwalk on Lake Martin, in Dadeville, Alabama. The site is located in Tallapoosa County, Alabama.

This request is part of the Alabama Power Company's review process. Please review the enclosed plan and return written comments to this office within Thirty (30) days. Feel free to contact this office with any questions.

Yours very truly,

Steven E. Speaks, P.E., P.L.S.

SES/cbb
Enclosures
Cc: file

Document Accessio

SENDER: COMPLETE THIS SECTION

- Complete items 1, 2, and 3.
- Print your name and address on the reverse so that we can return the card to you.
- Attach this card to the back of the mailpiece, or on the front if space permits.

1. Article Addressed to:

Wilmer R. Mathis
104 Lakewood Lane
Dadeville, AL 36853

9590 9402 4414 8248 9950 08

2. Article Number *(Transfer from service label)*
7007 2560 0003 0312 3409

COMPLETE THIS SECTION ON DELIVERY

A. Signature
X Sandra Mathis
☐ Agent
☐ Addressee

B. Received by *(Printed Name)* SANDRA MATHIS
C. Date of Delivery 8-13-20

D. Is delivery address different from item 1? ☐ Yes
If YES, enter delivery address below: ☐ No

3. Service Type
☐ Adult Signature
☐ Adult Signature Restricted Delivery
☑ Certified Mail®
☐ Certified Mail Restricted Delivery
☐ Collect on Delivery
☐ Collect on Delivery Restricted Delivery
☐ Insured Mail
☐ Insured Mail Restricted Delivery (over $500)
☐ Priority Mail Express®
☐ Registered Mail™
☐ Registered Mail Restricted Delivery
☐ Return Receipt for Merchandise
☐ Signature Confirmation™
☐ Signature Confirmation Restricted Delivery

PS Form 3811, July 2015 PSN 7530-02-000-9053 Domestic Return Receipt

7007 2560 0003 0312 3409

U.S. Postal Service™
CERTIFIED MAIL™ RECEIPT
(Domestic Mail Only; No Insurance Coverage Provided)

For delivery information visit our website at www.usps.com®

OFFICIAL USE

Postage	$ 1.40
Certified Fee	3.55
Return Receipt Fee (Endorsement Required)	2.85
Restricted Delivery Fee (Endorsement Required)	
Total Postage & Fees	$ 7.80

DOWNTOWN STATION
Postmark Here
AUG 11 2020
36104-99

Sent To *Wilmer R. Mathis*
Street, Ap *104 Lakewood Lane*
or PO Bo *Dadeville, AL 36853*
City, State

PS Form 3800, August 2006 See Reverse for Instructions

Document Accession #: 20201229-5039 Filed Date: 12/29/2020

LARRY E. SPEAKS & ASSOCIATES, INC.
CONSULTING ENGINEERS & LAND SURVEYORS
535 Herron Street
Montgomery, Alabama 36104
Telephone: 334.262.1091
Facsimile: 334.262.2211

AIRPORTS
BRIDGE DESIGN
CONSTRUCTION MANAGEMENT
ENVIRONMENTAL PERMITS
HIGHWAY DESIGN
LAND DEVELOPMENT PLANNING & DESIGN
LAND USE STUDIES
MUNICIPAL WORKS
PARKS & RECREATION FACILITIES

SEWAGE COLLECTION, TREATMENT & DISPOSAL
SOLID WASTE LANDFILLS
STORM DRAINAGE STUDIES & DESIGN
SUBDIVISIONS
SURVEYING: LAND SURVEYS
CONSTRUCTION SURVEYS
TOPOGRAPHIC MAPS
WATER SUPPLY, TREATMENT & DISTRIBUTION

August 7, 2020

Marilyn M Gillespie
3174 Knightsbridge Curve
Montgomery, AL 36111

RE: Proposed FERC Permit Construction Plan
Lake Martin Land Company
Lake Martin, Dadeville, Alabama
Tallapoosa County

Dear Mrs. Gillespie:

You are receiving this letter and attached Non-Residential FERC permit Construction Plan because you are an adjacent landowner to the above referenced project. On behalf of the developer, Lake Martin Land Company, we request your comments regarding the construction of five (5) proposed boat docks and one (1) boardwalk on Lake Martin, in Dadeville, Alabama. The site is located in Tallapoosa County, Alabama.

This request is part of the Alabama Power Company's review process. Please review the enclosed plan and return written comments to this office within Thirty (30) days. Feel free to contact this office with any questions.

Yours very truly,

Steven E. Speaks, P.E., P.L.S.

SES/cbb
Enclosures
Cc: file

7007 2560 0003 0312 3232

U.S. Postal Service™
CERTIFIED MAIL™ RECEIPT
(Domestic Mail Only; No Insurance Coverage Provided)
For delivery information visit our website at www.usps.com®
OFFICIAL USE

Postage	$ 1.40
Certified Fee	3.55
Return Receipt Fee (Endorsement Required)	2.85
Restricted Delivery Fee (Endorsement Required)	
Total Postage & Fees	$ 7.80

Postmark Here
AUG 11 2020
36104-9998
MONTGOMERY, AL

Sent To
Marilyn M. Gillespie
Street, Apt. No. or PO Box No. 3174 Knightsbridge Curve
City, State, ZIP+4 Montgomery, AL 36111

7007 2560 0003 0312 3430

0000
MAIL

RETURN TO SENDER

- INSUFFICIENT ADDRESS
- NO SUCH NUMBER
- UNCLAIMED ☐ REFUSED
- ATTEMPTED - NOT KNOWN
- NO SUCH STREET
- VACANT
- NO CITY/STATE
- NOT DELIVERABLE AS ADDRESSED
- UNABLE TO FORWARD

FILE ____ DATE ____
CARR. UNIT ____

LARRY E. SPEAKS & ASSOCIATES, INC.
Consulting Engineers & Land Surveyors
535 Herron Street
MONTGOMERY, ALABAMA 36104-3321

TO:
Larry W. Nixon

NIX0646 432355255-1819 08/18/20
NOTIFY SENDER OF NEW ADDRESS
NIXON
2520 55TH SQ
VERO BEACH FL 32966-1909

NIXIE 326 DC 1 0009/13/2
RETURN TO SENDER
NOT DELIVERABLE AS ADDRESSED
UNABLE TO FORWARD
BC: 36104332135 2247N257082-01534

W
8.25

U.S. Postal Service™
CERTIFIED MAIL™ RECEIPT
(Domestic Mail Only; No Insurance Coverage Provided)

For delivery information visit our website at www.usps.com®

OFFICIAL USE

Postage	$ 1.40
Certified Fee	3.55
Return Receipt Fee (Endorsement Required)	2.85
Restricted Delivery Fee (Endorsement Required)	
Total Postage & Fees	$ 7.80

DOWNTOWN ST
AUG 11 2020
Postmark Here
36104-9998

Sent To *Larry W. Nixon*
Street, Apt. No. or PO Box No. *1646 Dollivor Drive*
City, State, ZIP+4 *Columbus, Ohio 43235*

PS Form 3800, August 2006 See Reverse for Instructions

7007 2560 0003 0312 3430

Document Accession #: 20201229-5039 Filed Date: 12/29/2020

Document Accession #: 20201229-5039 Filed Date: 12/29/2020

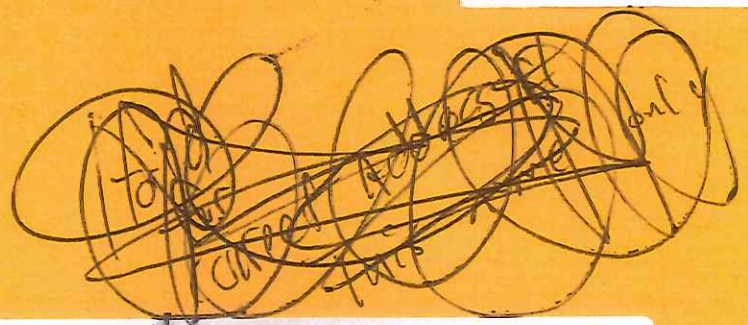

LARRY E. SPEAKS & ASSOCIATES, INC.
Consulting Engineers & Land Surveyors
535 Herron Street
MONTGOMERY, ALABAMA 36104-3321

TO:
Bennie Kent
8738 Ridgestone Court
Montgomery, AL 36117

NSN

FIRST CLASS MAIL

7007 2560 0003 0312 3362

U.S. Postal Service™
CERTIFIED MAIL™ RECEIPT
(Domestic Mail Only; No Insurance Coverage Provided)
For delivery information visit our website at www.usps.com®
OFFICIAL USE

Postage	$ 1.40
Certified Fee	3.55
Return Receipt Fee (Endorsement Required)	2.85
Restricted Delivery Fee (Endorsement Required)	
Total Postage & Fees	$ 7.80

DOWNTOWN STATION AUG 11 2020 36104-9998 Postmark Here

Sent To *Bennie Kent*
Street, Apt. or PO Box *8738 Ridgestone Court*
City, State, *Montgomery, AL 36117*

PS Form 3800, August 2006 See Reverse for Instructions

NIXIE 326 DE 1 000
RETURN TO SENDER
NO SUCH NUMBER
UNABLE TO FORWARD
BC: 36104332135 2247N249006

Document Content(s)

The Landing at Stillwaters FERC Submittal 12-21-2020.PDF 1